marantec
engineered for you

Battery Backup (Energy Pack 100) Installation Instructions

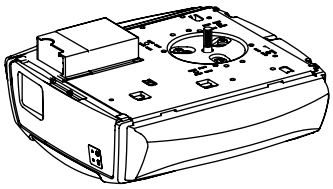

LW warranty

1-year
Limited Parts
Warranty

300 Series Operators

WARNING

IMPORTANT INSTALLATION INSTRUCTIONS TO REDUCE THE RISK OF SEVERE INJURY OR DEATH:

GARAGE DOOR OPERATORS WITH A BATTERY BACKUP (BBU) SYSTEM ARE "NOT DESIGNED TO SERVE AS A LIFE SAFETY DEVICE"

1. **READ AND FOLLOW ALL WARNINGS AND INSTALLATION, MAINTENANCE, AND TESTING INSTRUCTIONS.**
2. Use only the following **Model WP1.2-12 (Sealed cell, lead acid batteries with pressure release vents) and battery(ies) size 12V 1.2Ah.**
3. Do not dispose of the battery(ies) in fire. The cells may explode. Check with local codes for possible disposal instructions. Note: not applicable for battery(ies) not intended to be replaced.
4. Do not open or mutilate the battery(ies). Released electrolyte is corrosive and may cause damage to the eyes or skin. It may be toxic if swallowed.
5. Exercise care in handling battery in order not to short the battery with conducting materials such as rings, bracelets,and keys.
6. Change the battery(ies) provided with or identified for use with this product only in accordance with the instructions and limitations specified in this manual.
7. Observe proper polarity orientation between the battery(ies) and changing circuit.
8. Do not mix battery(ies) of different sizes or from different manufacturers in this product.
9. A battery-operated product employing a secondary supply intended to be charged within the product shall contain specific instructions concerning the proper method of charging.

WARNING

To reduce the risk of FIRE or INJURY:

- **Disconnect ALL electric and battery power BEFORE performing ANY service or maintenance.**
- **Use only Marantec replacement battery part #189945**
- **For continued protection against fire, replace FUSE only with Type Littlefuse Blade Fuse Series 257 rated 15 Amps, 32VDC**
- **DO NOT dispose of battery in fire. Battery may explode. Check with local disposal codes for disposal instructions.**
- **ALWAYS wear protective gloves and eye protection when changing the battery or working around the battery compartment.**

Energy Pack Installation:

- Disconnect power cord from operator (Fig. 2).
- Remove back cover (Fig. 2).
- Insert mounting plate (Fig. 3).
- Install energy pack and connect wire harness to connector XN70 (Fig. 4 and Fig. 5).
- Insert fuse (Fig. 6).
- Insert light guide into back plate and snap plate back in place (Fig. 7).
- Connect power cord to operator (Fig. 8).

Fig. 1

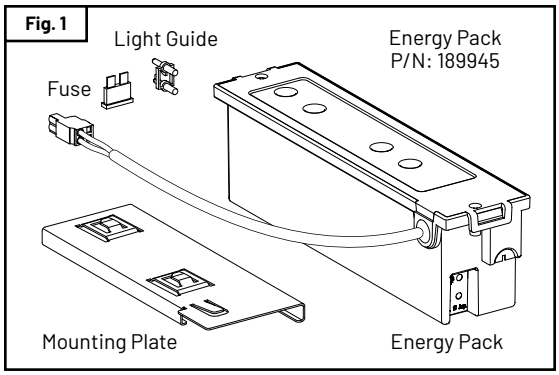

Fig. 2

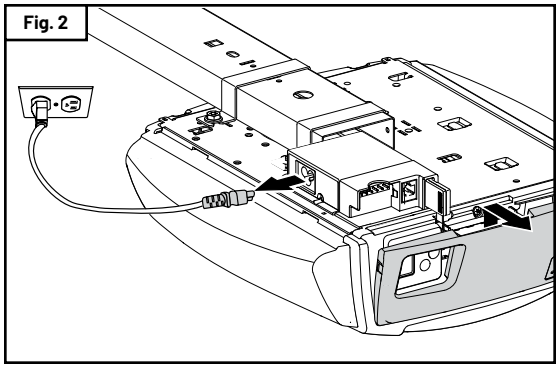

Fig. 3

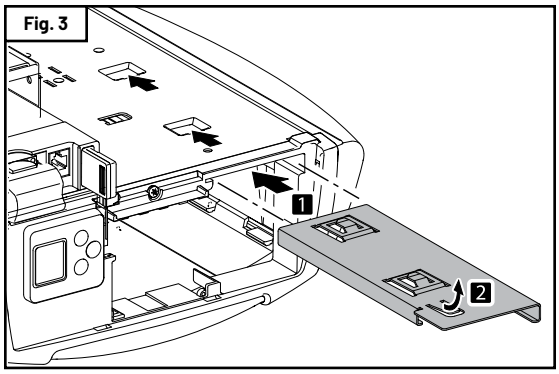

Fig. 4

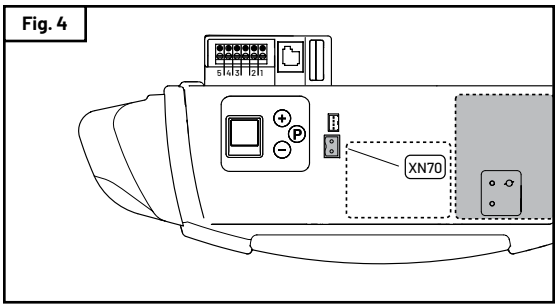

Fig. 5

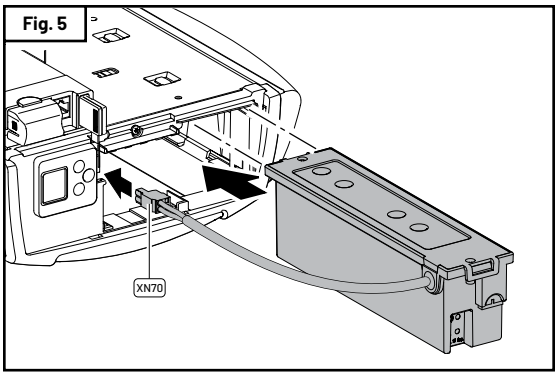

Fig. 6

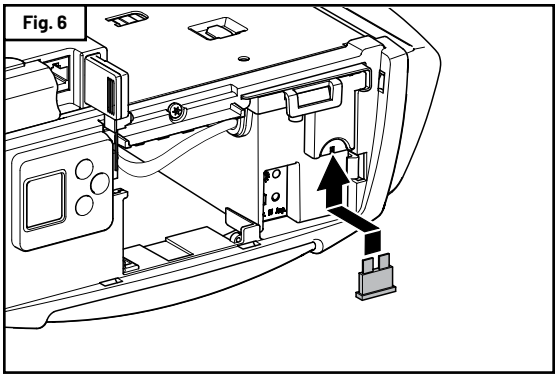

Fig. 7

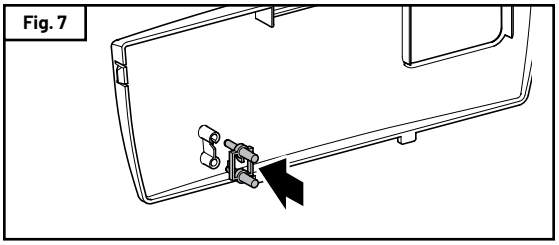

Fig. 8

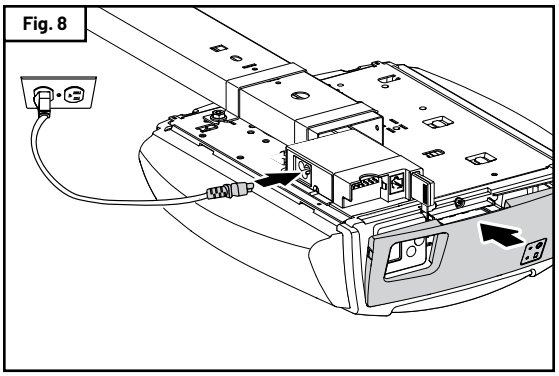

IMPORTANT

Battery Normal Charge Condition

Upon Connecting the new BBU Energy Pack 100 to the operator and connecting the operator to the main power source as shown in Fig. 8. After 20 seconds the system with automatically recognize the connection and display a screen shown in Fig. 9A.

IMPORTANT

Battery Low Charge Condition

In the event the operator does not recognize the connection, the steps in Fig. 9B must be performed to bring the BBU, Energy Pack 100, on-line with the operator.

Fig. 9

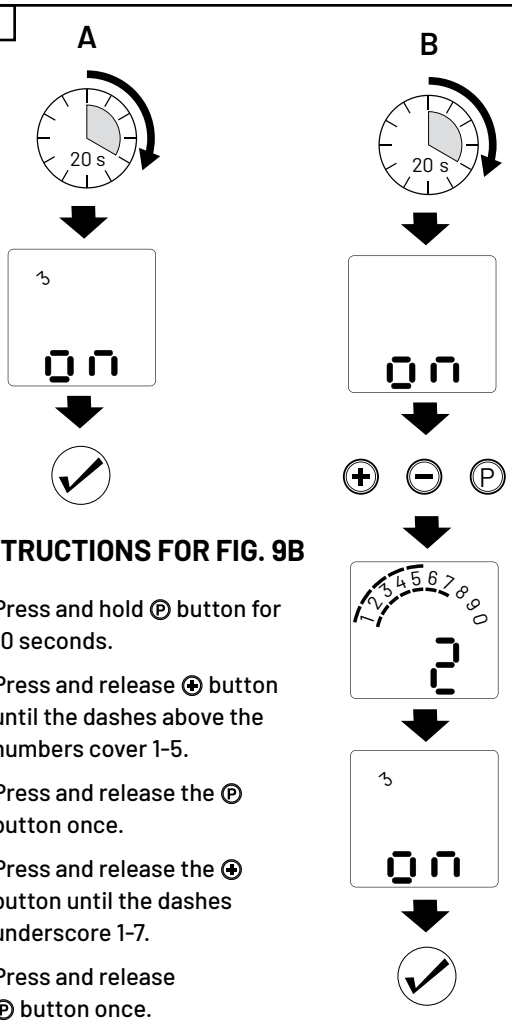

INSTRUCTIONS FOR FIG. 9B

1. Press and hold Ⓟ button for 10 seconds.
2. Press and release ⊕ button until the dashes above the numbers cover 1-5.
3. Press and release the Ⓟ button once.
4. Press and release the ⊕ button until the dashes underscore 1-7.
5. Press and release Ⓟ button once.
6. Press and release ⊕ button — Number 2 is blinking.
7. Press and release Ⓟ button once.
8. Press and hold button Ⓟ until the word "on" is being displayed Number 3 on the screen indicates that the BBU has been activated.

Fig. 10

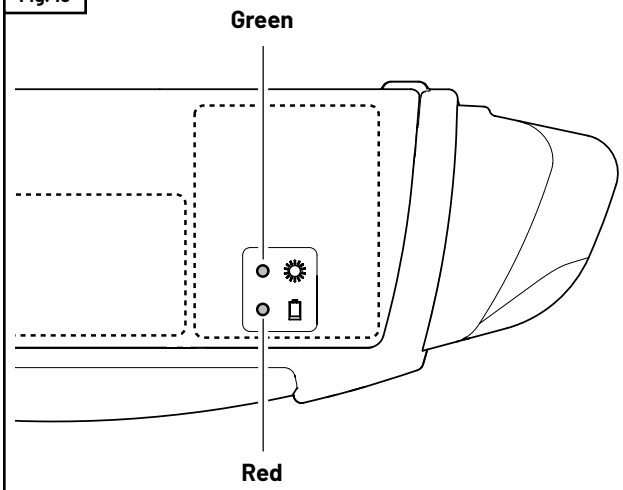

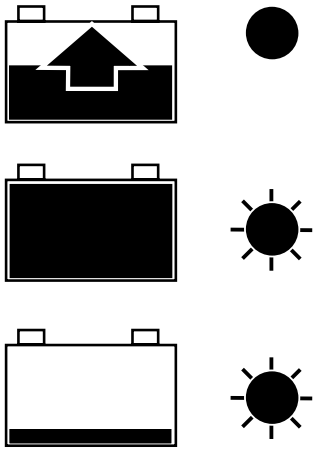

- Battery Charging green
  NOTE: New installation or after electrical power outage requires 24hrs to fully charge
- All Systems are Normal Fully Charged green
- Battery is Low red
  Replace batteries if blinking red LED persists 24hrs after power is restored

IMPORTANT

The battery charges when the garage door operator is plugged into a working electrical outlet (it has power). Required charging time for a new installation or after an electrical power outage is 24 hours.

- **To obtain maximum battery life and to prevent damage, disconnect the battery when the garage door operator is unplugged for an extended period of time.**
- **Energy Pack should be replaced every 1-2 years with normal use, under normal operating conditions.**
- **Replace fuse with Type Littlefuse Blade Fuse Series 257 rated 15 Amps, 32VDC ONLY (P/N 72280).**

WARNING

IMPORTANT MAINTENANCE AND TESTING INSTRUCTIONS TO PREVENT POSSIBLE SERIOUS INJURY OR DEATH:

GARAGE DOOR OPERATORS WITH A BATTERY BACKUP (BBU) SYSTEM ARE "NOT DESIGNED TO SERVE AS A LIFE SAFETY DEVICE"

All garage operators sold or replaced in the state of California effective July 1st, 2019 are required to be installed with a Battery Backup System (BBU). Violation of Bill SB 969 provisions are subject to a civil penalty of $1,000 per opener installed, manufactured, sold, or offered for sale which is not in compliance with Section 19890 of, and to added Section 19892 to, the Health and Safety Code relating to automatic garage door openers.

Battery Backup System (BBU) Maintenance and Testing

EVERY YEAR

Test periodically as outlined in testing guidelines below the battery backup system. Consider replacing the battery system to ensure the garage door operator will operate/function during an electrical power outage.

EVERY THREE (3) MONTHS

TESTING THE BATTERY BACKUP SYSTEM (BBU)

1. Unplug the garage door operator from AC power. The battery status GREEN LED will flash (operator is operating on battery power) or Status RED LED will flash (low battery power). Replace batteries if blinking RED LED persists 24 hours. after power is restored.
2. Open and close door using the remote control/transmitter or wall control console.
3. Plug the garage door opener back into AC Power. Verify the battery system status: LED is solid GREEN (Batteries are charging).

NOTE: New installation or after an electrical power outage, the system requires 24hrs for batteries to fully charge.

For battery backup replacement contact Marantec America at 1-888-622-2489.

Battery Backup replacement must be done ONLY with recommended by manufacturer part number 189945 (Battery Model WP1.2-12 Sealed Cell, Lead Acid with pressure release vents and Battery size 12V 1.2Ah).

Fig. 12

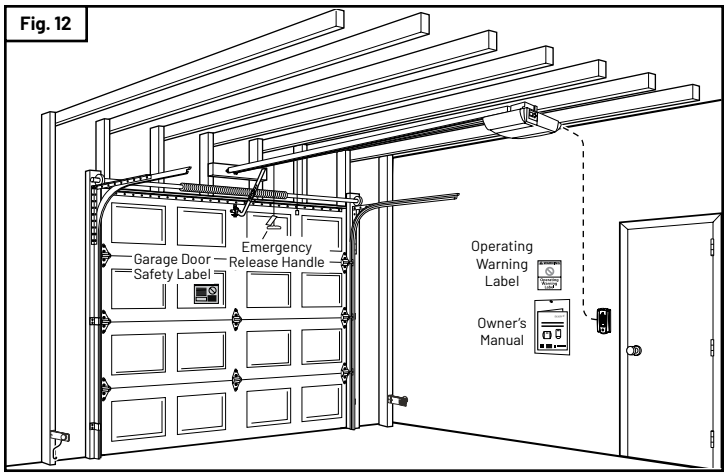

Copyright 2026. All rights reserved.

No part of this manual may be reproduced without our prior written approval.

Marantec reserves the right to change design and technical specification subject without notice.