marantec
engineered for you

Owner's Manual

Synergy 200 and 300 Series

Garage Door Operator System

Contains: installation, operating, maintenance & warranty instructions.

MARANTEC AMERICA CORPORATION
5705 CENTERPOINT COURT
GURNEE, IL 60031
TEL: 1-847-478-1500
WWW.MARANTECAMERICA.COM

BELT DRIVE

UL LISTED 89LL

50

EOS EASY OPERATING SYSTEM

MSBUS

Dear Valued Customer!

On behalf of all of us at Marantec, thank you very much for purchasing one of the quietest, most innovative and reliable garage door operators available today!

At Marantec, we consider safety and quality to be paramount. From inherent protection features to cutting edge technology such as LED lighting, you can rest assured that your new opener system will provide you and your family with safety and convenience for many years to come.

We are inviting you to register your new Marantec garage door operator within the next 10 days. Not only will we be able to contact you with important product updates. Registering your product will also serve as proof of purchase in case of fire, flood or theft and will allow us to serve you more effectively. Registering your Marantec opener is quick and easy:

Go to: www.marantecamerica.com

Also, help is only a phone call away! Please contact us at 1-888-622-2489 or at (001) 847-478-1500 when calling from outside of the United States. Our dedicated customer service team is looking forward to assisting you with any questions you may have.

Thank you again for choosing the Marantec family of products!

Marantec Accessories

Convenience in many forms. All of Marantec's transmitting and receiving devices operate on 315MHz and are HomeLink compatible.

Transmitters

Keypad

BBU

BlueFi Stick

Wireless Wall Station

External Receiver

Individualized features and customized comfort can be achieved with Marantec's extensive range of accessories. An extra transmitter or a wireless keyless entry system with expanded features, an integrated battery back-up unit for providing operator functionality during a power outage. The Maveo BlueFi stick brings Wi-Fi connectivity to your garage door opener. Whatever accessories you are looking for, we have them available.

Owner's Manual Contents

1. Introduction **5**
2. Advanced Features **5**
3. Important Safety Information **5**
4. Tools **6**
5. Garage **6**
6. Operator Package Contents **9**
7. Important Installation Instructions **11**
8. Installation Steps **12**
8-1. Measure and Mark Door Area 12
8-2. Install Header Bracket 13
8-3. Install Door Bracket to Door 13
8-4. Rail Assembly 14
8-5. Curved Door Arm Installation 16
8-6. Attach Rail to Operator Head 17
8-7. Attach Rail to Header Bracket 17
8-8. Position Operator for Mounting 18
8-9. Mount Operator to Ceiling 18
8-10. Connect Arm to Door and Trolley 19
8-11. Rail Bumper Installation 19
8-12. Check Emergency Release 20
8-13. Install Photo Eye Safety System 21
8-14. Install Wall Control Panel 22
8-15. Connecting Wires to Operator 22
9. Control Unit Connections **23**
10. Connect to Power **24**
11. System Set Up **24**
12. Advanced Settings **26**
13. Remote Controls **31**
14. Operation of Your Operator **34**
15. HomeLink® Transceiver **35**
16. Test Safety Reversal **36**
17. Align and Test Photo Eye Sensors **36**
18. Apply Labels to inside of Garage **37**
19. Attach Owner's Manual to Wall **37**
20. Important Safety Instructions **37**
21. Tension Adjustment **38**
22. Rail Length Adjustment **38**
23. Rail Parts **39**
24. Operator Parts **41**
25. Accessories **43**
26. Troubleshooting **53**
27. Maintenance Adjustments **54**
28. Maintenance Record **54**
29. Limited Parts Warranty **55**
30. Warranty Limitations, Claims and Service **57**
31. Registration **57**
32. For Warranty Service **57**

1. Introduction

Congratulations on purchasing your Marantec® Synergy Garage Door Operator System, the most innovative operator available today. This stylishly designed digital operator with a wide range of accessories is engineered to provide the smoothest, quietest and safest operation to compliment any application. Advanced technology results in the operator being capable of easily moving almost any properly balanced sectional door, and at the same time providing state-of-the-art safety features to detect obstructions and to stop and reverse the door, thus helping to protect persons and property near the door.

2. Advanced Features

This operator includes numerous state-of-the-art features to provide you, the user, with years of trouble-free, convenient, and safe use of your automatic garage door operator.

- **Advanced Digital Operating System EOS (Easy Operating System):**
  The EOS digital system provides an user friendly system set up. The EOS system requires only the initial set up parameters. All other operating parameters are learned and set automatically by the system. In addition, the system optimizes all parameters with every cycle for a more efficient operation by the GDO. This shorter parameter set up provides a quicker and more efficient installation.
- **New LED Lighting System:**
  Provides a green energy efficient lighting approach to conventional incandescent lighting. Added convenience requires no light bulb replacement.
- **Precision Controlled DC Motor, Complete with Automatic Soft Start and Soft Stop Feature:**
  The operator automatically detects when your door is almost fully closed or fully opened, and gradually slows the door down before it reaches its fully closed or opened position. During start-up, the door starts moving slowly and gradually ramps up to full speed for the full travel of your door. This reduces the possible damaging effects of the sudden starts and stops associated with some other operators, and results in the smooth operation and increased service life of your door and hardware.
- **Quiet, Smooth Operation:**
  Precision engineering and carefully selected materials result in extremely smooth and quiet operation, unmatched by conventional garage door operators.
- **Modular Antenna Concept (patented):**
  Plug-in your choice of frequency module.
- **Built-In Safety Features:**
  Including patented drive system that delivers only the optimum power needed to move your door safely - Every time!
- **Photo Eye (Infrared) Safety System:**
  State-of-the-art infrared beam system helps detect obstructions in the path of your door and automatically reverses closing door travel, helping to protect persons and property near the door.
- **LCD Display System Control:**
  Easy navigation through levels and menus.
- **Convenient Status Display:**
  To indicate the status of your door operator at any time. Especially useful if troubleshooting is necessary.
- **Numeric Parameter Display Setting:**
  Provides easier and quicker setup.
- **Numeric Error Code Display:**
  Provides quicker troubleshooting.
- **Maintenance and Service Scheduling:**
  Optimizes operator service life and trouble-free performance.
- **The EOS platform unifies all Marantec Products by design.**
- **Meets all UL 325 requirements.**

3. Important Safety Information

This manual is essential to the safe and proper installation, operation, and maintenance of your operator. Read and follow all guidelines and operating instructions before the first use of this product. Store the manual in a safe, easily accessible location.

WARNING

Operate the garage door operator at 120V, 60Hz to avoid operator damage. Garage doors are heavy, moving objects. When coupled with an automatic operator, electrical power is also present. If not properly installed, balanced, operated, and maintained, an automatic door can become dangerous and cause serious injury or death. Please pay close attention to the WARNING and CAUTION notices that appear throughout this manual. Failure to follow certain instructions may result in damage to the door or door opener, or may result in severe injury or death to yourself or others.

WARNING

WARNING means that severe injury or death could result from failure to follow instructions.

Mechanical

WARNING

WARNING means that severe injury or death could result from failure to follow instructions.

Electrical

CAUTION

CAUTION means that property damage or injury could result from failureto follow instructions.

4. Tools

The items shown below are helpful to complete proper installation, adjustment, and maintenance of the garage door operator. Additional tools may be required depending on your particular installation.

Fig. 1

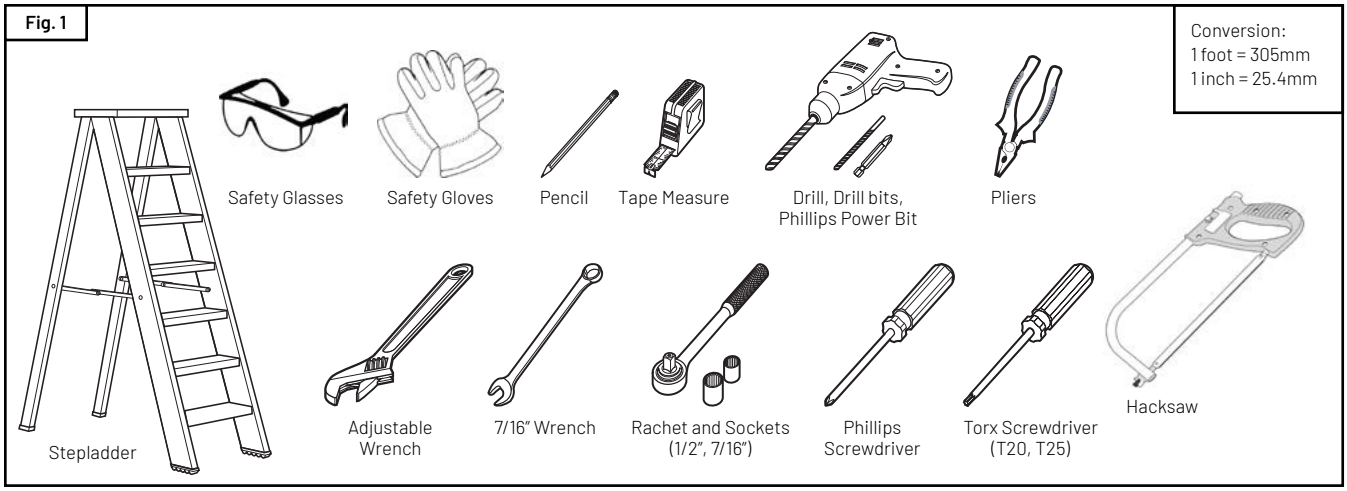

5. Garage

⚠ WARNING ⚠

A garage door is a heavy moving object and can cause serious injury or death. An unbalanced door might not reverse when required, and can increase the risk of injury. If your garage door is out of balance, or if it binds or sticks, call for professional garage door service. Garage doors, springs, pulleys, cables, and hardware are under extreme tension and can cause serious injury or death.

Do not try to adjust them yourself. Ropes left on a garage door could cause someone to become entangled and could kill them. Remove all ropes= connected to the door before installing your operator.

Take a moment to survey your garage and garage door.

- Is there an access door besides the garage door? If not, you should install an emergency key release kit.
- With the garage door closed, check alignment of door and garage floor. The gap, if any, should be no more than 1/4" (6mm). If the gap is larger than this, repair floor or door before installing operator.
- The operator is intended for installation on a properly balanced and adjusted garage door. DO NOT INSTALL IF DOOR IS UNBALANCED OR BROKEN.
- Check balance of door in mid travel and during full range of opening and closing. Lift the door about half way, as shown in Fig. 2 and 3. Release the door. It should remain in place, supported by its springs. Raise and lower the door fully to check for binding or sticking.
- If door is out of balance or needs repair, DO NOT ADJUST IT YOURSELF. CALL A QUALIFIED GARAGE DOOR SERVICE PROFESSIONAL to adjust your door.
- If your door is over 7ft. (2.1m) high, you will need a longer rail. See section **6. Operator Package Contents (page 9)** for availability of longer rails.

Fig. 2

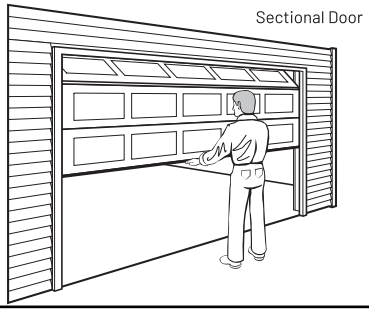

Fig. 3

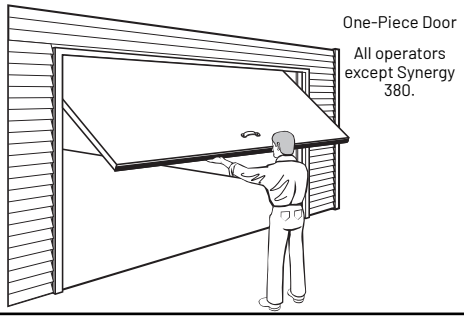

ATTENTION

To prevent damage to steel, aluminum, fiberglass or glass panel doors, always reinforce the inside of the door both vertically and horizontally with steel or angle iron bracing.

The best solution is to follow the instructions for your particular garage door or contact the garage door manufacturer for proper reinforcement instructions.

5. Garage (cont'd)

Door Construction Diagrams

Check the type of door construction you have. The information contained in the figures below will be referred to later in the manual for proper installation of the different door types.

Fig. 4

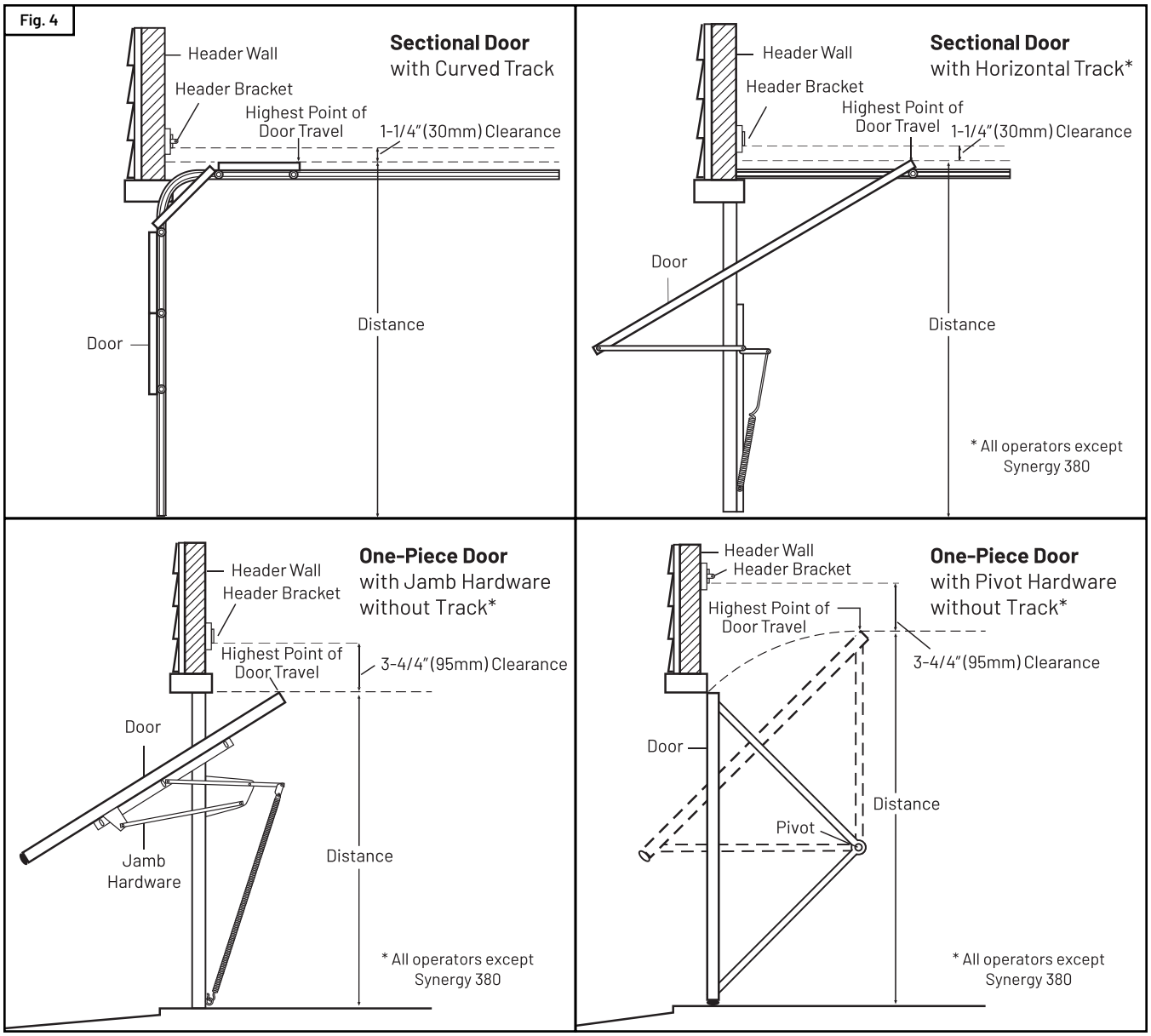

5. Garage (cont'd)

Garage Door Operator System Overall Dimensions — 7' (2.13m) Door

SYNERGY 200 SERIES OPERATORS

Fig. 5

Standard Application

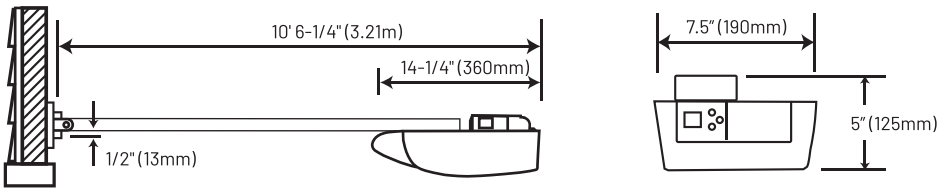

Space Saver Application

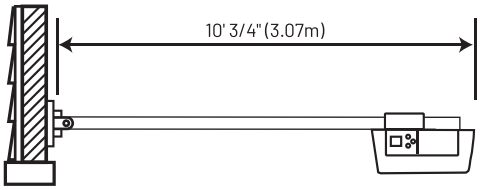

Headroom Clearance - 1-1/4" (32mm)

SYNERGY 300 SERIES OPERATORS

Fig. 6

Standard Application

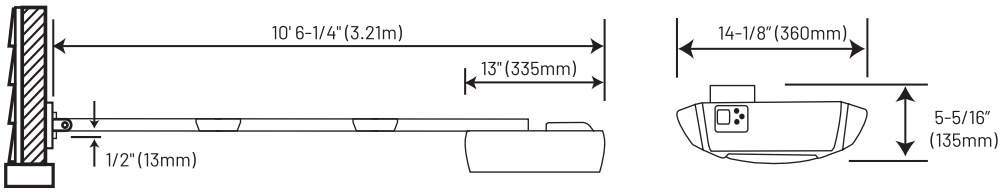

Space Saver Application

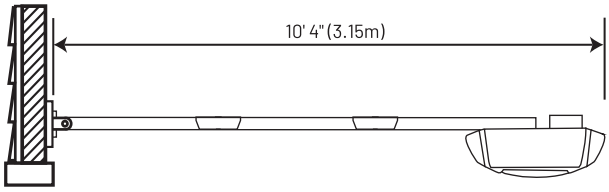

Headroom Clearance - 1-1/4" (32mm)

6. Operator Package Contents

Belt Rail Assembly (packaged in separate carton)

1-PIECE RAIL

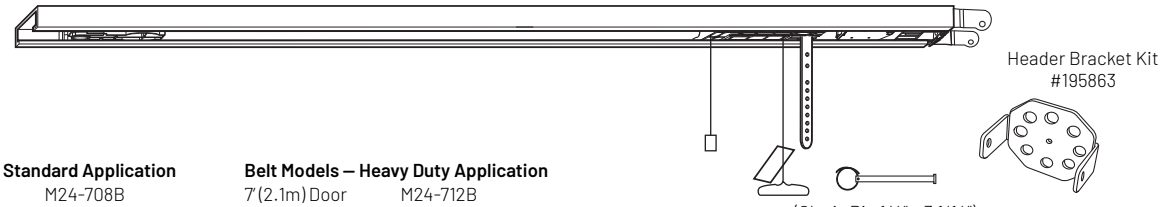

Belt Models — Standard Application

7' (2.1m) Door	M24-708B
8' (2.4m) Door	M24-808B

Belt Models — Heavy Duty Application

7' (2.1m) Door	M24-712B
8' (2.4m) Door	M24-812B

2-PIECE RAIL

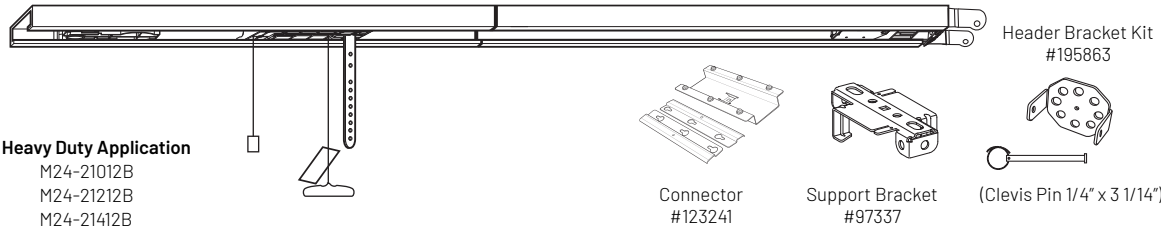

Belt Models — Heavy Duty Application

10' (3m) Door	M24-21012B
12' (3.6m) Door	M24-21212B
14' (4.2m) Door	M24-21412B

3-PIECE RAIL

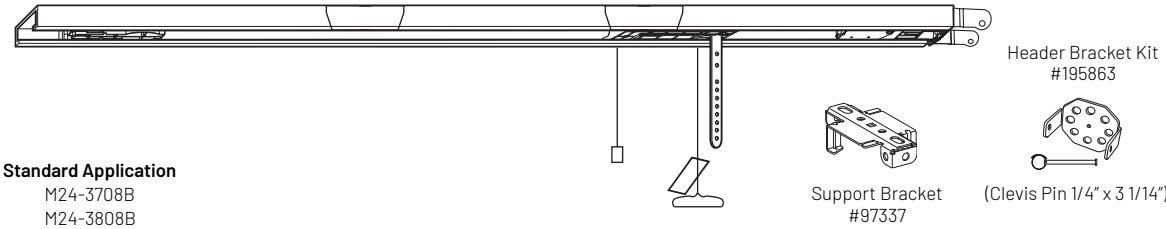

Belt Models — Standard Application

7' (2.1m) Door	M24-3708B
8' (2.4m) Door	M24-3808B

6. Operator Package Contents (cont'd)

The following items are included with your Garage Door Operator (GDO). All hardware components are located in the GDO carton. The accessories are packaged with their respective hardware in separate packs for ease of identification and use.

Fig. 7 **OPERATOR**

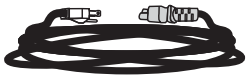

6 Ft. (1.8m) Detachable Power Cord

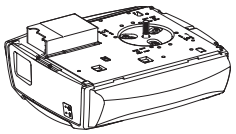

Synergy 300 Series
Manufacturing date located under operator right lens cover (facing the garage door).

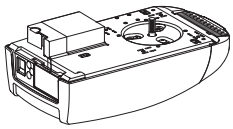

Synergy 200 Series
Manufacturing date located under operator lens cover.

Garage Door Operator Manual and Safety Labels

Fig. 8 **ACCESSORIES**

Transmitter (2)
4 channel (300 Series)
2 channel (200 Series)

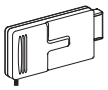

Modular Receiver

Visor Clip (2)

Terminal Block

Key Ring Attachment (2)

Programming Connector

Wall Control Panel
(with hardware kit)

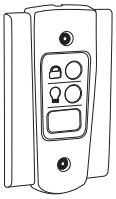

Tapered-Head Screws (2)

Staples (10)

Screw Caps (2)

30ft (9.2m) Conductor Wire

Machine Screws (2)

Drywall Anchors (2)

Photo Eye Safety System
(with accessories)

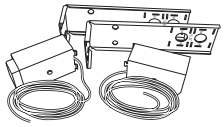

Sensor (RX) Sensor (TX)

Wire Holder Kit

HARDWARE KIT

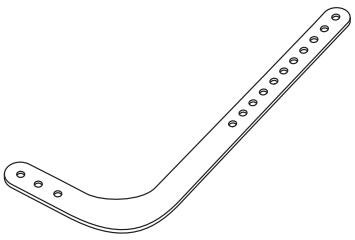

Curved Door Arm
#8009466

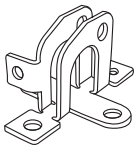

Door Bracket
#8030743

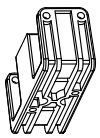

Bumper
#196669

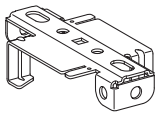

Support Bracket (2)
#97337

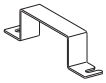

Rail Bracket (2)
#99082

Clevis Pin (1): 5/16" x 7/8"
Cotter Ring (1)

Carriage Bolt (2): 1/4" - 20 x 2"
Lock Washer (2): 1/4"
Hex Nut (2): 1/4" - 20

Lag Screw (2): 5/16" x 1-3/4"

Lag Screw (4): 1/4" x 1-1/2"

Hex Bolt (2): 5/16" - 18 x 3/4"
Lock Nut (2): 5/16" - 18

Hex Head Tek Screw (2): 1/4 x 3/4"

Screw (4): M5x8.5mm

Cap (2) #104740

Screw (2): 3.9x32mm

IMPORTANT NOTE

In the unlikely event that hardware is missing from your operator kit. Please **DO NOT RETURN THE OPERATOR KIT**. Call Marantec America customer service department at **1-888-622-2489**. Your missing hardware/parts will be sent to you immediately free of charge.

7. Important Installation Instructions

WARNING

TO REDUCE THE RISK OF SEVERE INJURY OR DEATH:

1. **READ AND FOLLOW ALL WARNINGS AND INSTALLATION INSTRUCTIONS.**
2. Check with the door manufacturer to determine if additional reinforcement is required to support the door prior to installation of the door operator.
3. Install operator only on a properly balanced garage door. An improperly balanced door could cause serious injury. Have a qualified service person make repairs to garage door cables, spring assemblies, and other hardware before installing the operator.
4. Remove all ropes and disable all locks connected to the garage door before installing operator.
5. If possible, install the door operator 7 feet (2.1m) or more above the floor. For products having an emergency release, adjust the emergency release cord for the handle to be within reach, but at least 6 feet (1.8m) above the floor and avoiding contact with vehicles to avoid accidental release.
6. Do not connect the operator to source of power until this manual instructs you to do so.
7. Locate the wall control station: (a) within sight of door, (b) at a minimum height of 5 feet (1.5m) above the ground so small children cannot reach it, and (c) away from all moving parts of the door.
8. Place the Operating Warning Label next to the wall control panel in a prominent location. Affix Safety Label on inside of garage door. The Emergency Release markings molded on handle.
9. After installing the operator, test Safety Reversal System. Door MUST reverse when it contacts a 1-1/2 inch (40mm) high object on the floor.
10. **SAVE THESE INSTRUCTIONS** for future safety, adjustment, and maintenance purposes.

SEE SECTION 20. IMPORTANT SAFETY INSTRUCTIONS (PAGE 37)

Shown on the right is an overall view of a completed garage door operator system installed on a sectional door.

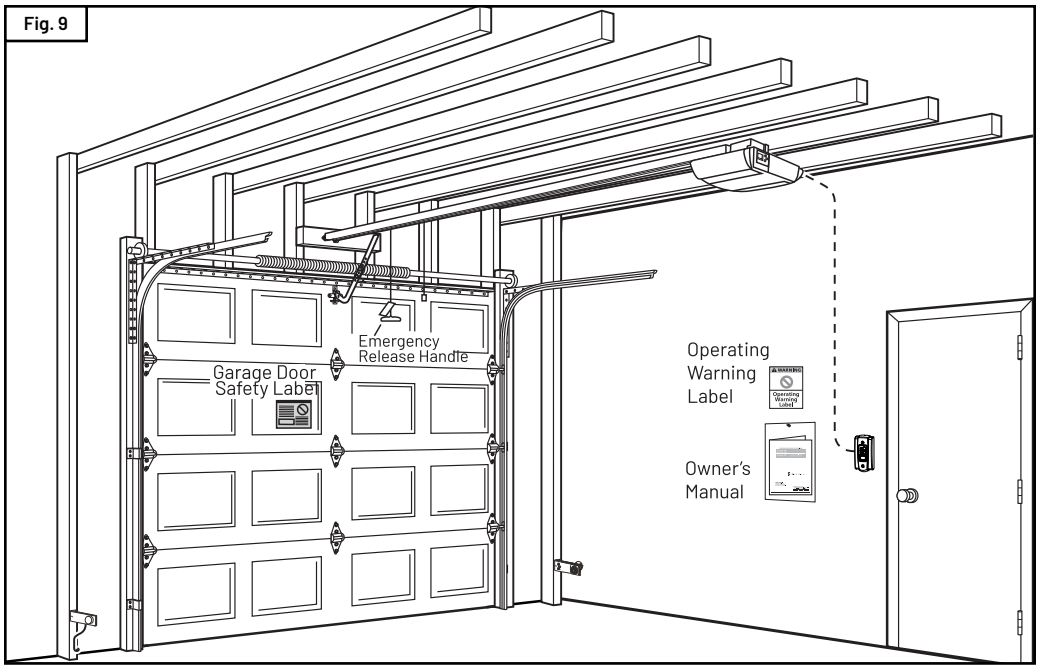

8. Installation Steps

WARNING

There is a possible risk of injury working with tools. Please protect yourself against possible injury during installation of the operator. Use the following protective equipment throughout installation:

- Safety glasses
- Protective gloves

Identify a sound structural support on header wall above garage door for header bracket mounting. If appropriate header does not exist, replace or install a new support using a 2x4 (50mm x 100mm) or a 2x6 (50mm x 150mm) board. Fasten it securely using lag screws (not provided) to structural supports of garage.

8-1. Measure and Mark Door Area

Before starting your installation, the door and the header above the door must be measured and marked. This way, the appropriate brackets can be mounted at the correct locations avoiding installation and operating difficulties later.

MARK VERTICAL CENTER LINE

- Measure door width, then locate the center point (Fig.10).
- Mark a vertical line on the upper half of your door, on the top edge of your door, and on the header, through the center point.

MEASURE DOOR'S HIGHEST TRAVEL POINT

Review **Door Construction Diagrams (page 7)** for details

- Open door to its highest travel point and measure from the garage floor to the top of door.
- Write down this distance.

For sectional doors and one-piece doors with horizontal track:

- Add 1-1/4" (30mm) to the door travel height (measured above).

For one-piece doors without track:

- Add 3-4/4" (95mm) to the door travel height (measured above).

MARK HORIZONTAL LINE FOR HEADER BRACKET LOCATION

- Close door and measure the required distance (determined above) from the garage floor to the header.
- Mark a horizontal line, intersecting the vertical center line, on header. This is the position at which the bottom of the header bracket should be installed.
- In case of minimal clearance above the door, the header bracket may be mounted to the ceiling. In this case, extend the vertical center line onto the ceiling, and mark a horizontal line on the ceiling no further than 4" (100mm) from the header wall. The header bracket should be mounted no farther than this distance from the header wall.

Fig. 10

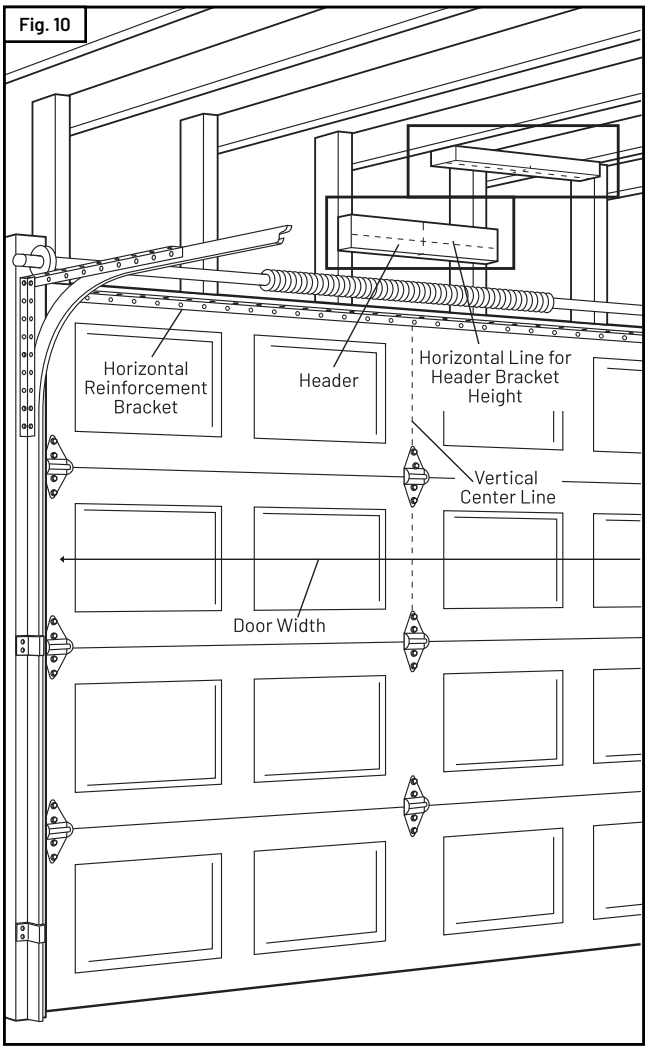

8-2. Install Header Bracket

WARNING

If the header bracket is not rigidly fastened to a sound structural support on the header wall or ceiling, the safety reverse system may not work and could cause serious injury or death. DO NOT move or adjust springs or garage door hardware, as these parts are under extreme tension and could cause injury or death.

Header bracket kit located in rail box.

- Mark pilot holes location on header through header bracket holes where lag screws will be inserted.
  IMPORTANT: See Fig. 11 for which header bracket holes to use)
- Drill 3/16" pilot holes into header, and install bracket with lag screws (5/16 x 1-3/4") provided.
- Tighten lag screws firmly.

NOTE: Follow the same procedure if header runs vertically instead of horizontally and is the only option for mounting header bracket to header wall. In case of minimal clearance above the garage door, the header bracket may be mounted to the ceiling (Fig. 12). Follow the same steps above to ensure a sound surface for mounting.

8-3. Install Door Bracket to Door

A. FOR SECTIONAL DOORS

Wood Sectional Doors (Fig.13)

- Position door bracket along vertical center line of door with pin hole facing top of the door and top edge of the bracket 4" to 5" (100 - 125mm) below top edge of the door, or roughly at the same height as top rollers on the door.
- Mark locations of securement holes through door bracket.
- Drill two 1/4" holes through door for securement of door bracket.
- Insert carriage bolts (1/4" x 2") from the outside through door and bracket, then secure with lock washers and nuts from the inside.
- Tighten nuts firmly.

Metal Sectional Doors

- Attach door bracket with two tek screws (provided) per door manufacturer recommendations.

B. FOR ONE-PIECE DOORS

Before starting the installation of the door bracket, cut off mounting leg from opposite side of pin hole (Fig. 13).

One-Piece Doors with Exposed Frames (Fig. 14A)

- Position center of door bracket on the center line on the top edge of door.
- Mark the position where carriage bolts will go through bracket, and drill two 1/4" holes through top frame of door.
- Install carriage bolts from the bottom, through door frame and bracket, and secure with lock washer and nut from top.
- Tighten nuts firmly.

One-Piece Doors without Exposed Frames (Fig. 14B)

- For doors without exposed frames, use alternate method of mounting door bracket.
- Mark and drill two 3/16" pilot holes into top of frame, then secure bracket with 5/16" x 1-5/8" lag screws (not provided).

Fig. 11

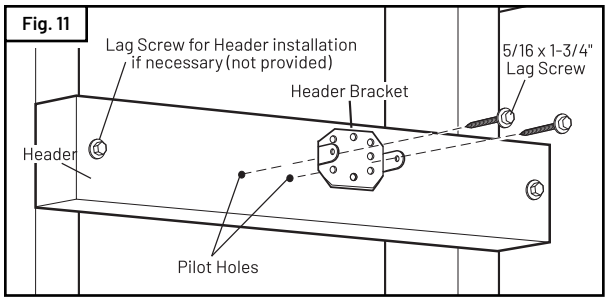

Fig. 12

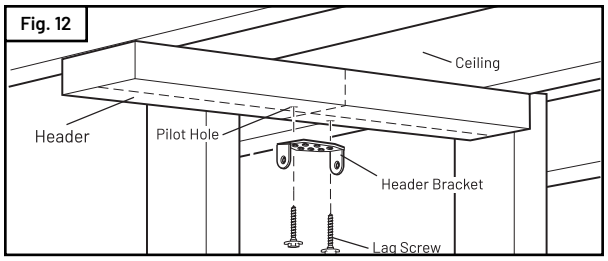

Fig. 13

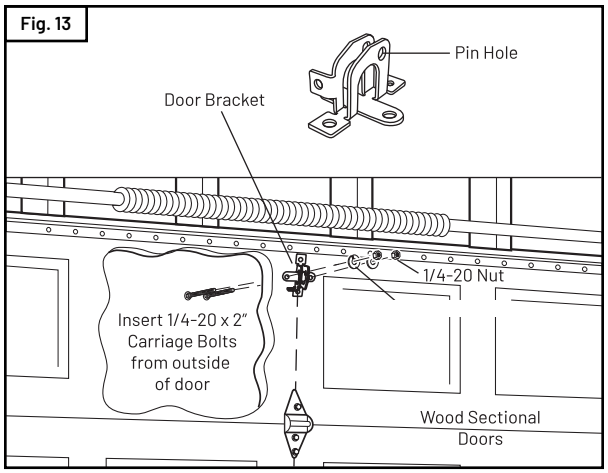

Fig. 14A

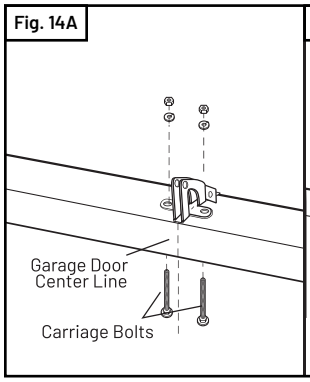

Fig. 14B

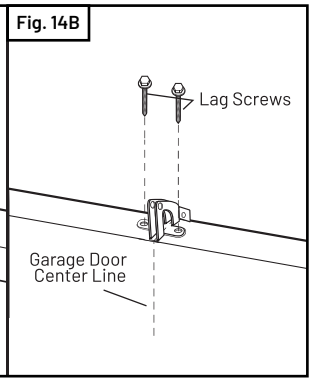

One-Piece Door with Exposed Frame:

Install with Carriage Bolts

One-Piece Door without Exposed Frame:

Install with Lag Screws (not provided)

8-4. Rail Assembly

A. 1-PIECE RAIL ASSEMBLY

NOTE: Rail comes fully preassembled with straight door arm already attached.

- Unpack preassembled rail.
- Leave straight door arm taped inside rail for safe and convenient installation—it will be untaped and used later.
- Place first mounting bracket over rail (close side) on a diagonal. Make sure support securement clamps clear rail sides.
- Twist mounting bracket and secure onto rail 12" (305mm) from sprocket end side of rail as shown in Fig. 15.
- Place second mounting bracket over the backside of the rail 33" (840mm) from pin hole as shown on Fig. 16.
- Secure second bracket. See Fig. 15.

B. 2-PIECE RAIL ASSEMBLY

- Unpack 2-piece preassembled and pretensioned rail and place it on the floor.
- Save mounting (center support) bracket for later in the installation.
- Leave straight door arm taped inside rail for safe and convenient installation—it will be untaped and used later.
- Take the rail half with the end bracket and trolley and insert rail in connector as shown in Fig. 18, step 1.
- Swing the other rail half and insert rail in connector as shown in Fig. 18, step 2. Lower the rail end towards the floor to snap rail half in place.
- Install connector clamps and tighten screws as shown in Fig. 20.
- Install mounting brackets as described above.
- Place and secure center support bracket as shown in Fig. 20.

Fig. 15

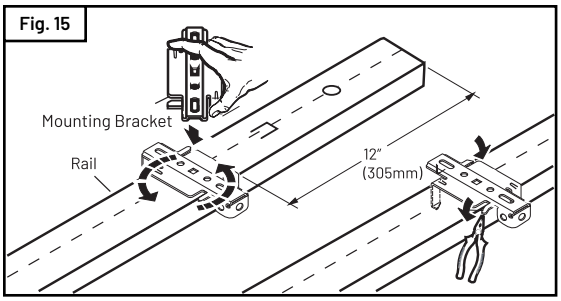

Fig. 16

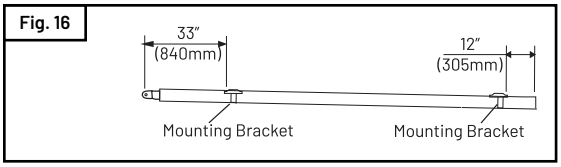

Fig. 17

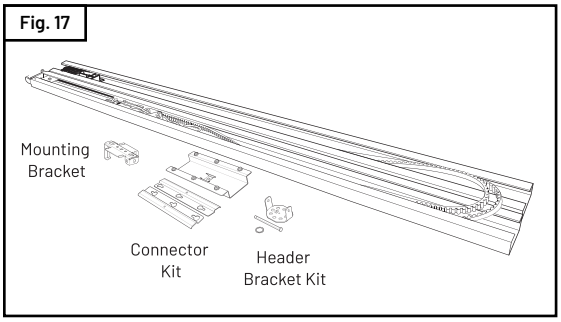

Fig. 18

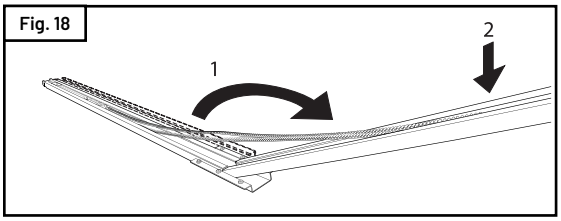

Fig. 19

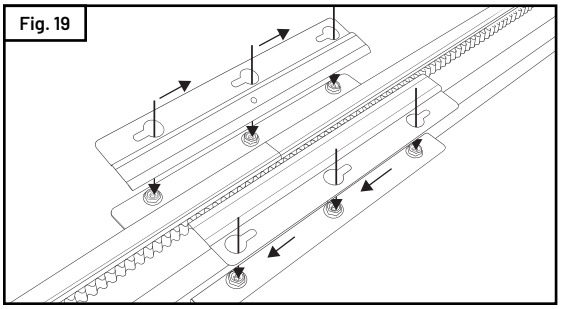

Fig. 20

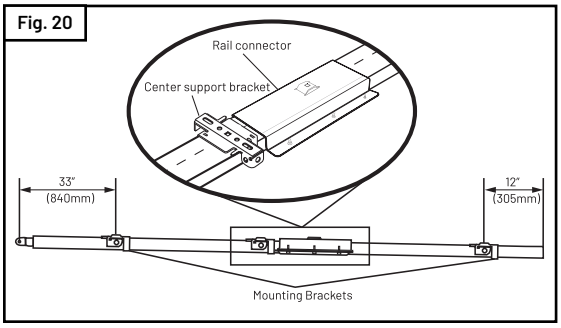

8-4. Rail Assembly (cont'd)

C. 3-PIECE RAIL ASSEMBLY

- Remove three-piece preassembled and pretensioned rail from rail box and place it on the floor as shown in Fig. 21.
- Save mounting bracket for later in the installation.
  ATTENTION: Leave straight door arm taped inside rail for safe and convenient installation. Instructions when to unwrap straight door arm will be given in operator's instruction manual.
- Insert one end of rail middle section with connectors in rail section with sprocket holder as shown in Fig. 21 step 1.
- Slide connector over rail until positioning marks on connector center align with rails joining line as shown in Fig. 21 step 1A.
- Swing rail section with the end bracket and trolley over and insert it into the connector as shown in Fig. 21 step 2B.
- Lower the rail end to the floor.
  ATTENTION: Belt will snap into place.
- Slide second connector over rail until positioning marks on connector align with rails joining line as shown in Fig. 21 step 2C.
- Locate and use the two mounting brackets included with operator's hardware kit. **ATTENTION: Make sure mounting brackets are over rail (close side) on an diagonal.**
- Place first mounting bracket on rail sprocket side, and secure onto rail 12" (305mm).
- Place and secure second mounting bracket over the backside of the rail 33" (840mm) from pin hole.
- Place and secure third mounting bracket provided in rail packaging.

Fig. 21

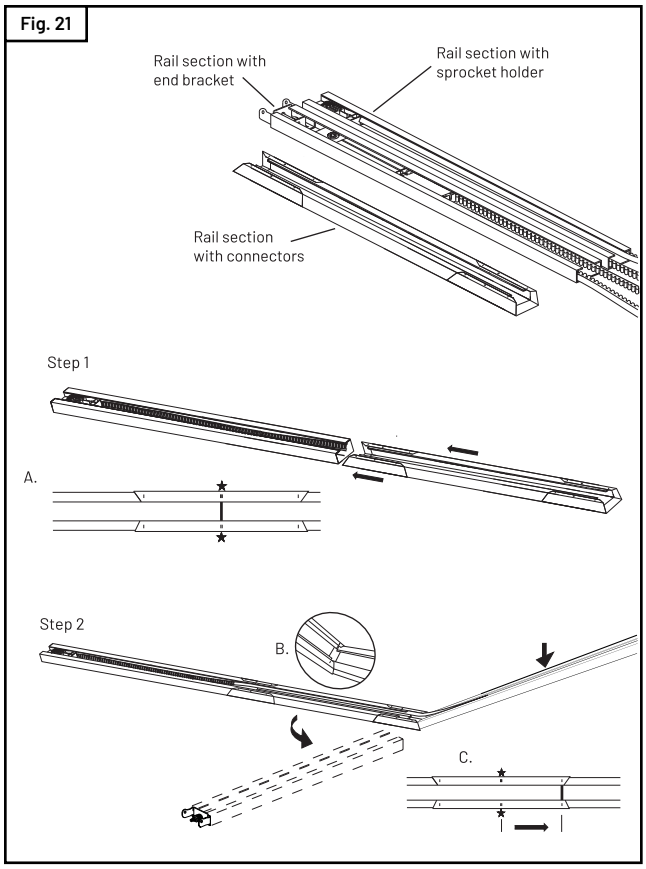

Fig. 22

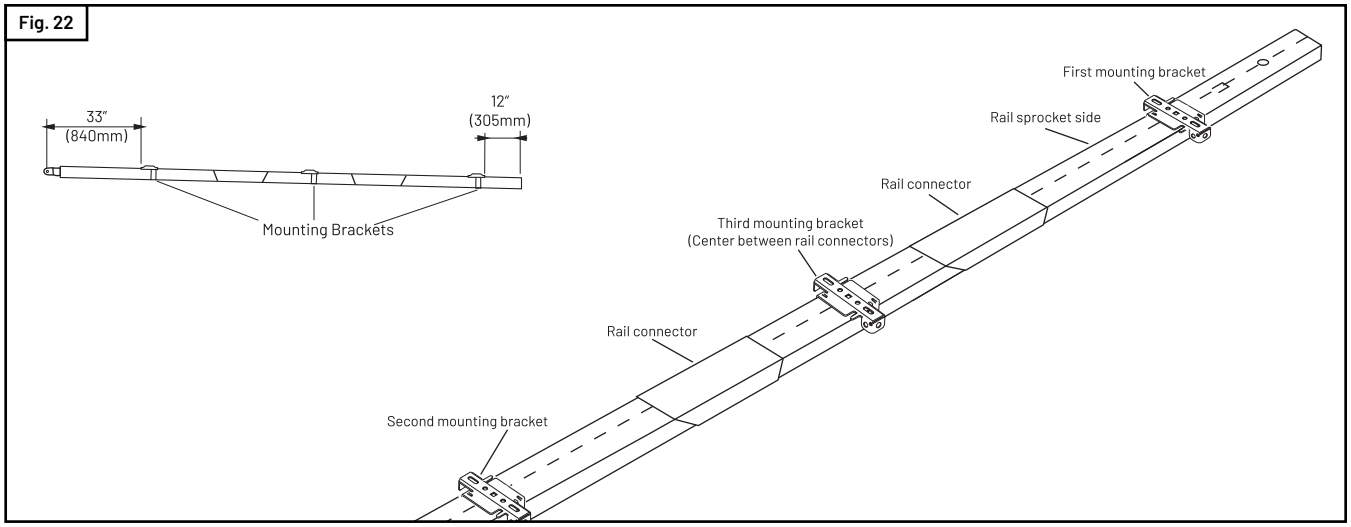

8-5. Curved Door Arm Installation

ADDITIONAL STEP FOR ONE-PIECE DOORS ONLY

IMPORTANT NOTE: For installation on One-Piece Doors only, the straight door arm that is factory installed onto the rail must be replaced by the curved door arm supplied as part of hardware in the operator box.

Recommended: Replace arm after attaching rail to operator.

- Turn rail over so that open channel in rail faces up.
- Untape straight door arm that is secured inside rail.
- Remove and save the two screws that are securing the door arm pin and straight door arm (Fig. 23).
- Lift arm and pin straight out of slot in trolley, and remove pin from straight door arm.
- Insert pin into short side of curved door arm as shown.
- Orient arm so that long side extends away from trolley.
- Carefully insert pin and door arm into slot in trolley. Push pin into slot with door arm so pin is fully seated into trolley slot.
  IMPORTANT: Pin must be straight and seated properly into recessed area in trolley.
- Secure pin and curved arm with the two screws which were removed from trolley—DO NOT use any other screws.
- Tighten screws firmly.

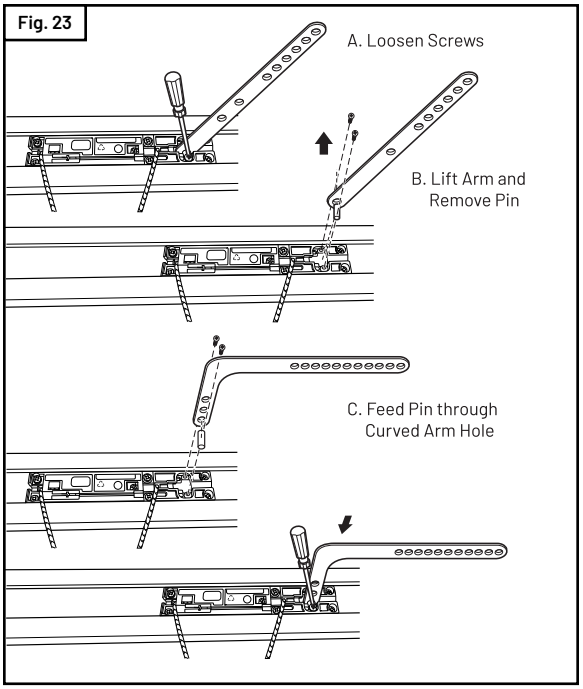

Fig. 23

8-6. Attach Rail to Operator Head

WARNING

When fastening the rail to the operator, use only the screws provided. Use of any other screws may result in operator falling from ceiling and causing damage to persons or property in the garage.

- Position operator with control panel facing the back of garage. Rest operator head on cardboard or a protective surface on the floor so the housing does not get scratched.
- Position rail onto operator chassis by lining up rail sprocket opening with motor head shaft (Fig. 24). Make sure shaft engages teeth inside rail sprocket. Press rail down firmly onto the shaft and opener chassis.
  IMPORTANT: DO NOT USE A HAMMER OR ANY OTHER TOOLS FOR THIS STEP.
- Position the two rail brackets over the rail as shown in Fig. 24.
- Insert screws (M5 x 8.5) through bracket holes and into the chassis holes. Tighten screws firmly to hold rail to head.

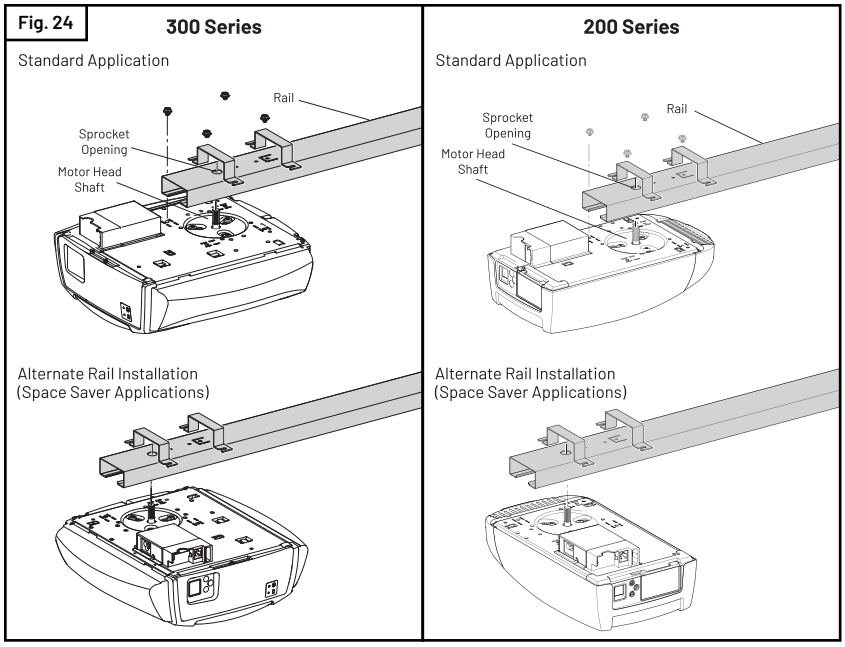

8-7. Attach Rail to Header Bracket

- Support operator head slightly off the floor.
- Lift the opposite end of the rail up to the header bracket.
- Position rail end-stop within the openings in the header bracket. Insert header clevis pin (1/4" dia.) through header bracket and rail end, then attach cotter ring to end of pin. (See Fig. 26A)

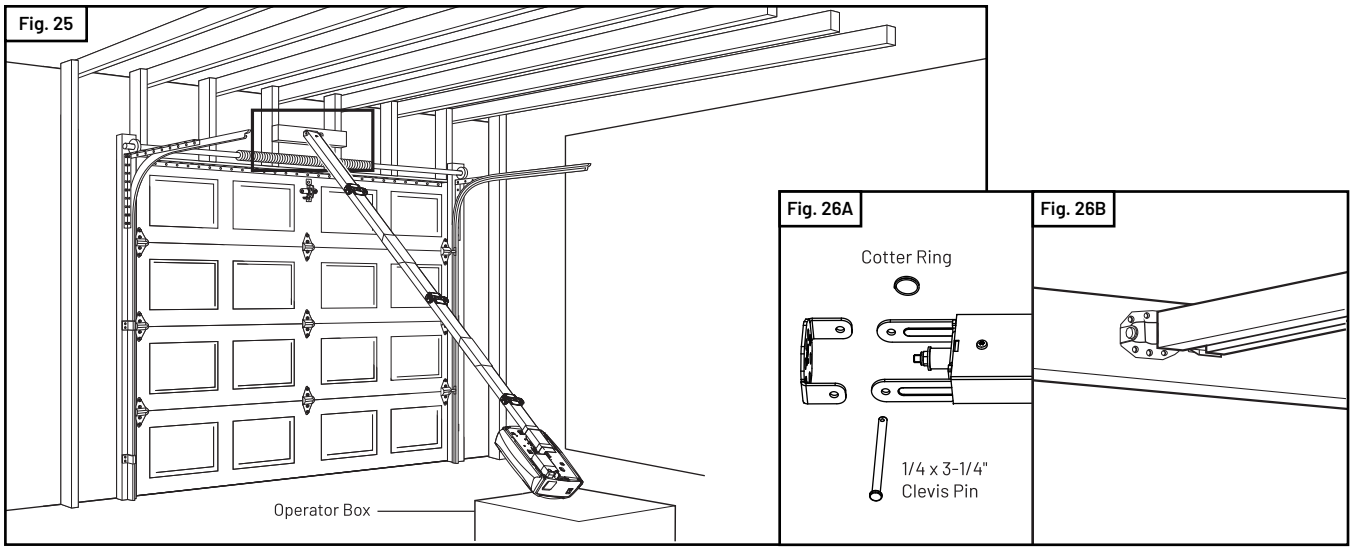

8-8. Position Operator for Mounting

Once rail is attached to header bracket, support operator on ladder or use the assistance of another person to hold operator high enough so door can open without hitting the rail.

IMPORTANT NOTE

Synergy 380 Install on Section Doors ONLY

A. SECTIONAL AND ONE-PIECE DOORS WITH TRACK (FIG. 27)

- Open garage door to fully opened position, and place a 2x4 (50mm x 100mm) laid flat between the door and the rail.
- This provides an easy method of ensuring the correct mounting height of the opener.

B. ONE-PIECE DOORS WITHOUT TRACK (FIG. 28)

- Move trolley toward opener head.
- Open door all the way so that it is parallel to the floor, or slightly tilted toward the front of the garage. **DOOR SHOULD NOT BE TILTED TOWARD THE BACK OF GARAGE.**
- Position operator so that top of operator head is level with top of opened door.
- To check for correct mounting height, temporarily position curved door arm as if connecting to door bracket.
- The long side of the arm should be parallel to the floor when door is fully opened. Raise or lower powerhead so that arm will be parallel to floor.
- Temporarily support head at this height, and prepare to mount the operator to ceiling.

8-9. Mount Operator to Ceiling

WARNING

If not properly secured, the operator could fall and injure someone. Secure opener to structural supports or framing. Do not mount to drywall, plaster, or other such material.

- Position opener head so that rail is lined up with center line of open door.
- Line up sturdy perforated angle (not provided) with ceiling joists above rail mounting bracket. In case of finished ceiling use stud finder to locate joists.
- Mark location for 5/16" x 2" lag screws (not provided), and drill two 3/16" pilot holes.
- Fasten sturdy perforated angle to joists using lag screws.
- Measure distance from each side of mounting bracket to the perforated angle.
- Cut pieces of hanging brackets (perforated angles) to required lengths.
- Attach one end of each hanging brackets to rail mounting brackets with 5/16"-18 x 7/8" hex bolts, 5/16"-18 nuts, and 5/16" lock washers (hardware not provided).
- Fasten another end of hanging brackets to perforated angles using the same hardware.
- Once opener is securely fastened in position, remove wood block and lower door. Check door for proper operation and clearance by manually moving door to full open and closed position. If door hits rail at any point, raise opener head slightly higher and re-mount in position.
- Mark location and drill pilot holes for the second perforated angle which will be located above the second mounting brackets.
- **Follow the same steps above for third support bracket to mount 2-piece and 3-piece rails. See Fig. 30B and 30C.**

Fig. 27

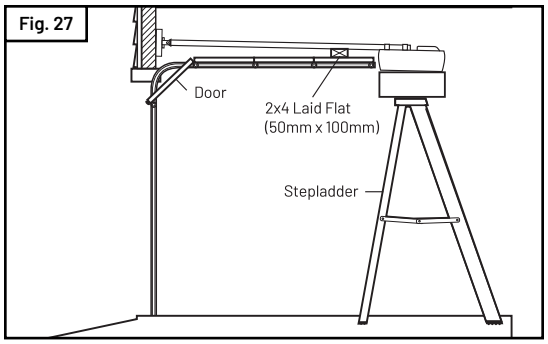

Fig. 28

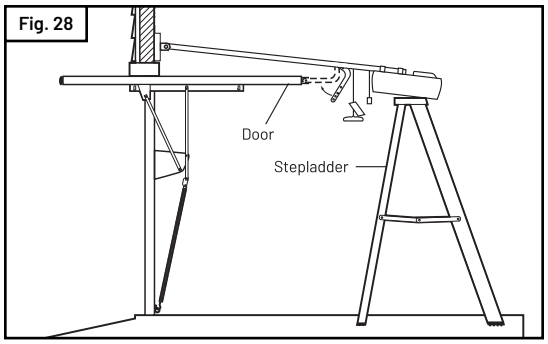

Fig. 29

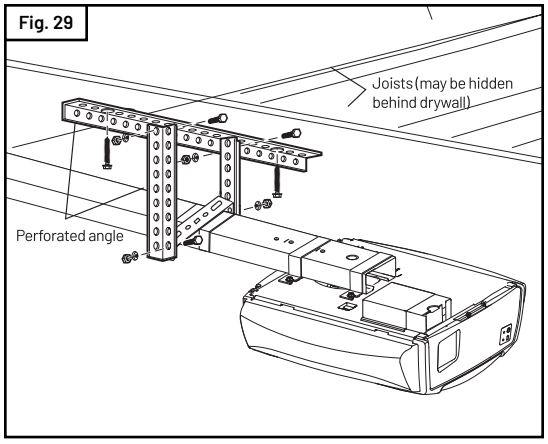

Fig. 30A

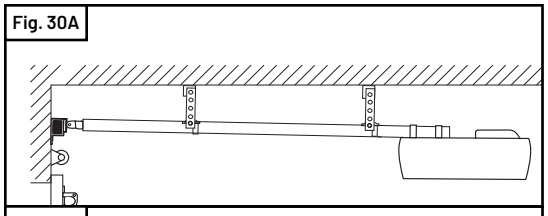

Fig. 30B

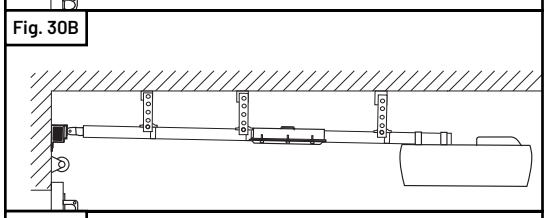

Fig. 30C

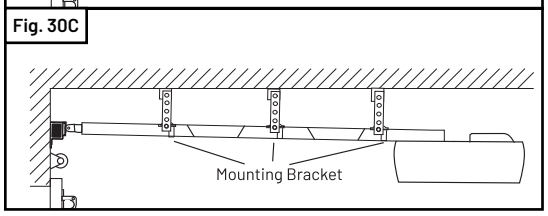

8-10. Connect Arm to Door and Trolley

- Make sure door is fully closed.
- Remove wrapping tape from rail holding straight door arm and allow door arm to hang freely.

A. SECTIONAL DOORS

- Position curved door arm into door bracket channel so that short end of arm will be attached to door bracket. See Fig. 31. Curved door arm should be attached roughly at the same height as the top rollers of the door.
- Align curved door arm and bracket holes, then insert clevis pin through holes. Attach cotter ring to hold pin in place.
- Position straight arm and curved arm to form an angle with the door (See Fig. 32) and at least two sets of holes line up. Select two overlapping holes as far apart as possible and secure arms together with hex bolts 5/16"-18x3/4" and 5/16"-18 lock nuts.

B. ALL ONE-PIECE DOORS

- Curved door arm should already be attached to trolley in place of straight door arm. See section **8-6. Attach Rail to Operator Head (page 17)**.
- Position free end of curved arm into do or bracket slot.
- Align curved door arm and bracket holes, then insert clevis pin (5/16" dia.) through holes. Attach cotter ring to pin to hold in place. See Fig. 33.

C. SECTIONAL AND ONE-PIECE DOORS

- After connecting appropriate door arm, ensure trolley is disengaged. Check for proper door operation by manually lifting then lowering to fully opened and closed positions.
- Readjust door arm if needed.

8-11. Rail Bumper Installation

ATTENTION

The rail bumper is an important part of the garage door operation system. The bumper is designed for setting up and monitoring the operator's travel limits.

- With the trolley still in the unlocked position, manually move door up to the desired location. See Fig. 34.
- Snap rail bumper into place as shown in Fig. 35.
- Hold door and measure 1/2" (13mm) between trolley end and the bumper as shown in Fig. 36. This is the installation location for the rail bumper.

Important: The distance between the trolley and the bumper should not be greater than 1/2".

- Secure bumper with self-tapped 3.9 x 32mm screws provided. Cover screws with plastic caps provided as shown in Fig. 36.

IMPORTANT NOTE

Pull green bell handle to lock trolley, then move door manually until trolley locks with belt connector.

Fig. 31

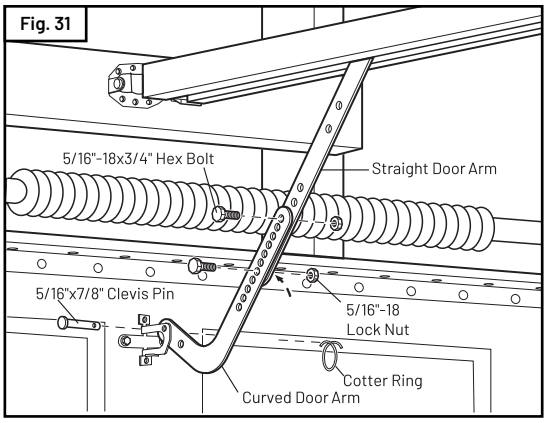

Fig. 32

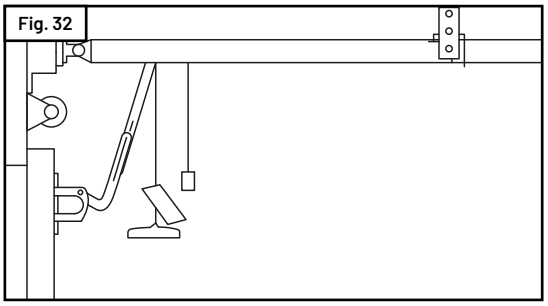

Fig. 33

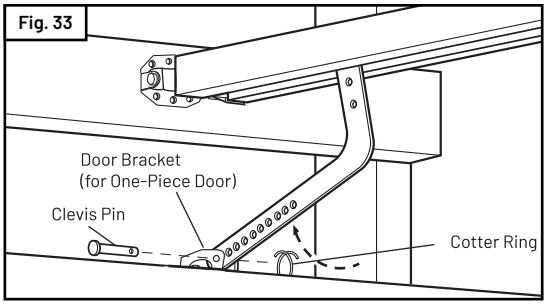

Fig. 34

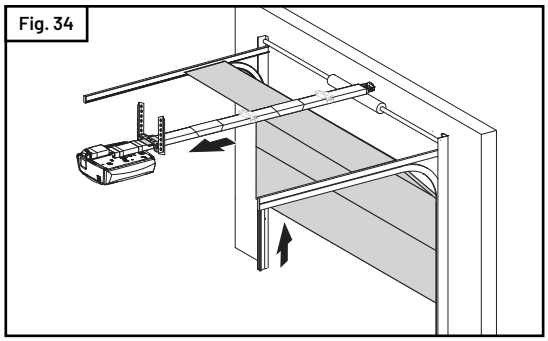

Fig. 35

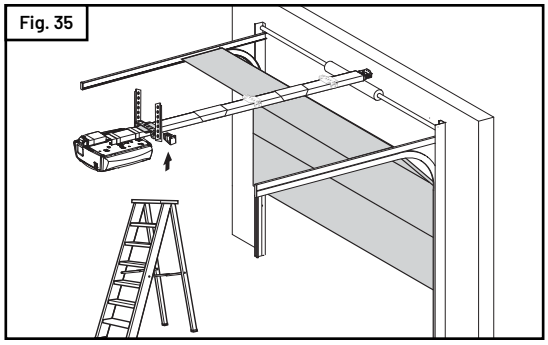

8-12. Check Emergency Release

WARNING

To prevent possible SERIOUS INJURY or DEATH from a falling garage door:

- **If possible, use emergency release handle to disengage trolley ONLY when garage door is CLOSED. Weak or broken springs or unbalanced door could result in an open door falling rapidly and/or unexpectedly.**
- **NEVER use emergency release handle unless garage doorway is clear of persons and obstructions.**
- **NEVER use handle to pull door open or closed.**

The release cord with red handle should be adjusted to hang 6 ft. (1.8m) above garage floor.

To adjust:

- Slide handle up on cord.
- Tie new knot at correct height.
- Cut excess cord, leaving approximately 1" (25mm) after knot.
- Heatseal end of cord with match or lighter to prevent fraying.
- Slide handle back into place.

The reconnect cord with green bell handle should be 6-8 inches shorter.

The emergency release cord with red handle are extremely important parts of the operator system. Pulling the release cord (see Fig. 27) disengages the door from the opener. This allows the door to be moved manually up and down independent of the opener motor.

If the door is in the open position, use extreme care when using the release.

Use emergency release to disconnect the door if the power is out. This allows the door to be moved manually up and down independent of the operator motor. It should also be used if for some unforeseen reason the door strikes a person or object during its travel and does not automatically reverse off the obstruction.

To release door—pull red emergency release handle. (Fig. 37)

To re-engage door, pull green bell handle. Now the door can be reconnected by moving it manually and bringing it into position when the connector is inside of the trolley.

Fig. 36

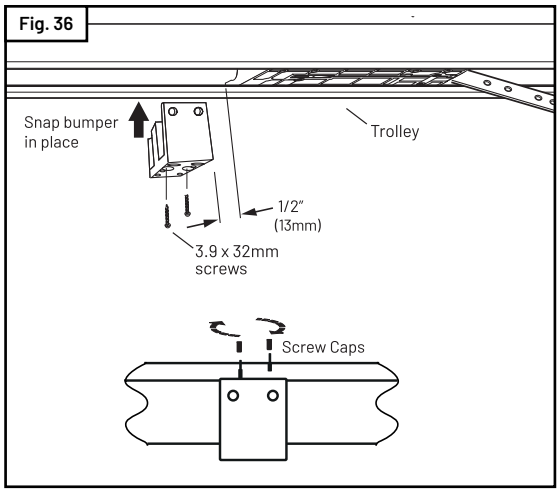

Fig. 37

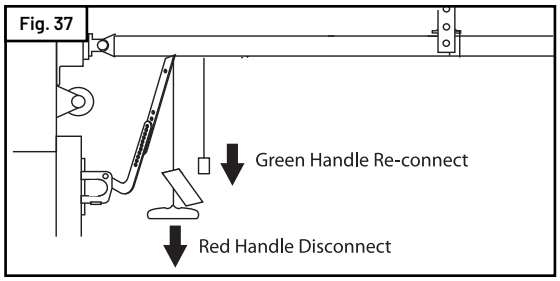

8-13. Install Photo Eye Safety System

WARNING

To provide the maximum protection install the photo eye sensors so beam is NO HIGHER than 6" (150mm).

MOUNTING THE PHOTO EYE SENSOR BRACKETS TO WALL

- Locate the mounting position for photo eye brackets 3.5" to 5" (90-125mm) from floor level. After mounting, the photo eye beam must have a clear path from one side of the door to the other.
- Use the bracket mounting holes as a template to locate an drill (2) 3/16" diameter pilot holes on both sides of the garage door as shown in Fig. 38.
- Secure the bracket with 1/4" x 1-1/2" lag screws provided as shown in Fig. 38.

MOUNTING THE PHOTO EYE SENSORS TO MOUNTING BRACKET. (FIG. 39)

- Install the sensors to the mounting bracket by inserting bend clips of sensor bracket through the vertical slot on mounting bracket.
- Insert straight clips through other set of vertical slot on the mounting bracket.
- Twist one of the straight clips slightly to lock the sensor in place once inserted through vertical slot on the mounting bracket.
- Repeat the above procedure for the other sensor.

ROUTE WIRES (FIG. 40)

- Route wires along wall use staples (not provided) to secure wiring to wall. Do NOT punch wire. Drive staples with only enough force to hold wiring in place. Be sure the wiring is routed away from all moving parts of door and rail.
- Run wires along the top of the rail assembly and secure them in wire holders.

DUAL DOOR INSTALLATION (FIG. 41)

- In dual door installations, the transmitter (TX) and the receiver (RX) photo eye sensors (as marked on each of the photo eye components) should be mounted as indicated in Fig. 41. TX and RX marks located on the back side of the transmitter and receiver

Fig. 38

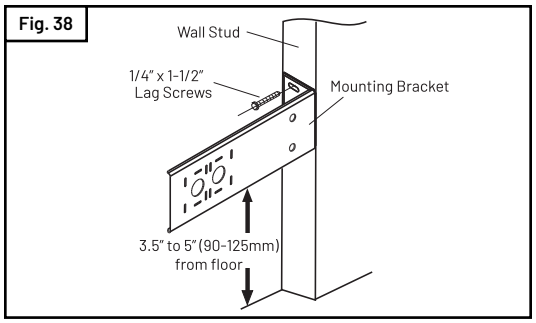

Fig. 38A

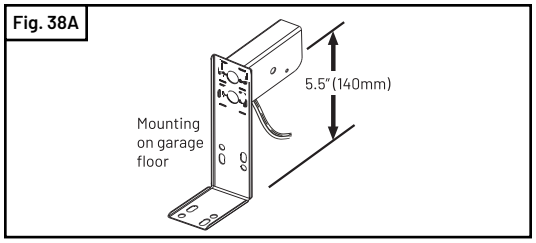

Fig. 39

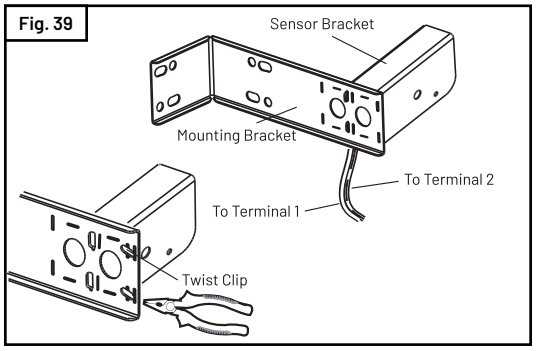

Fig. 40

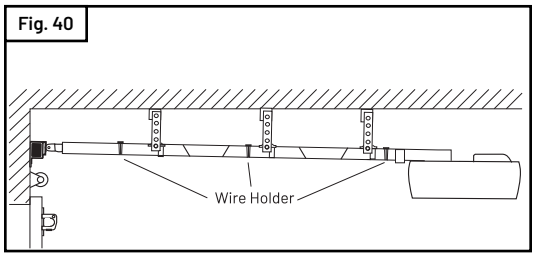

Fig. 41

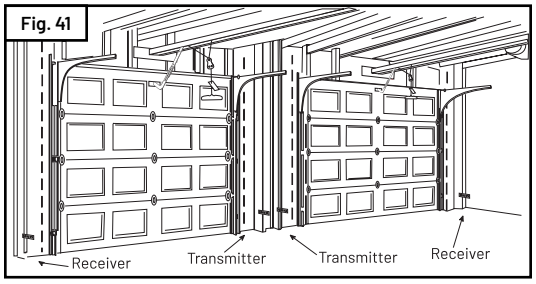

8-14. Install Wall Control Panel

The control panel must be mounted inside the garage within sight of the garage door, clear of all moving garage door parts or any associated parts — and at least 5 feet (1.5m) above the floor to prevent the use of these controls by children. The device should only be used when the door is in clear sight of the user and the door area is free of people or any obstructions.

- Attach 2-conductor wire to the screw terminal on back of control panel. See Fig. 42 (Back). White wire attaches to terminal #3 screw, white wire with color stripes attaches to terminal #4 screw.
- Position wall control panel onto wall in desired location.
- Mark hole location on wall.
- Drill 1/16" pilot holes into wall.
- Insert and tighten screws to secure control panel to wall.
- Make sure wiring is routed out from behind control through one of the cutouts to avoid pinching the wires.
- Route wires along wall use staples (provided) to secure wiring to wall. Do NOT punch wire. Drive staples with only enough force to hold wiring in place. If mounting to drywall instead of wood, drill 3/16" pilot holes and use anchors provided.

If mounting to drywall instead of wood, drill 3/16" pilot holes and use anchors provided. If mounting to electrical box that is prewired for this purpose, mount directly to box with proper screws provided. See Fig. 42A.

MULTIPLE WALL CONTROL (FIG. 42B)

- Wall control design provides a modular assembly of multiple wall controls. **Each wall control must be connected to a designated garage door opener, only one wall control per operator.**
- Detach wall control's right side panel(s).
- Attach wiring to back on each wall control (white wires to terminal #3 screws, wires with stripes to terminal #4 screws).
- Assemble wall control module and secure to the wall.
- Complete installation as outlined above in step 1 and 2 for each wall control.

8-15. Connecting Wires to Operator

- Separate the double wire from each photo eye into two single wires: the white wire and the white wire with black stripes.
- Combine the white wires from each photo eye and twist stripped ends together tightly.
- Insert stripped end of white wire combination into terminal block hole #1.
- Repeat procedure for the white wires with black stripes except insert them into terminal hole #2.
- Separate the double wire from wall control into two single wires: the white wire and the white wire with red stripes.
- Insert stripped end of white wire into terminal block hole #3.
- Insert stripped end of white wire with red stripes into terminal block hole #4.
- Connect terminal block with attached wires to control unit. See Fig. 43, 46.

For reference see the wiring diagram in Fig. 47 on page 23.

Fig. 42

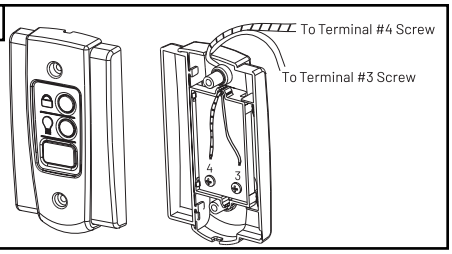

Fig. 42A

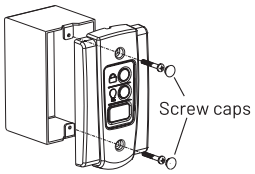

Fig. 42B

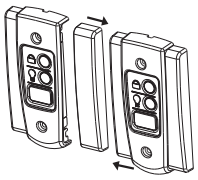

Fig. 43

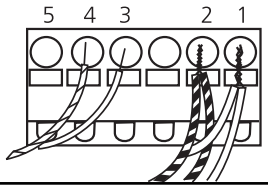

9. Control Unit Connections

WARNING

DANGER OF ELECTRIC SHOCK:

Before any wiring work begin, make sure that the operator and all wiring is disconnected from the power supply. During wiring make sure all wires remain disconnected from the power supply at all times.

A	GDO expansion module slot
B	Integrable Battery backup (optional)
C	Battery backup display
XB03	Connection for – Wall control – Photo eye safety system
XB72	Connection for modular antenna
XN70	Connection for battery backup
XW40	Connection for BlueFi Stick
XW81	Inputs/outputs modules connection

Fig. 44

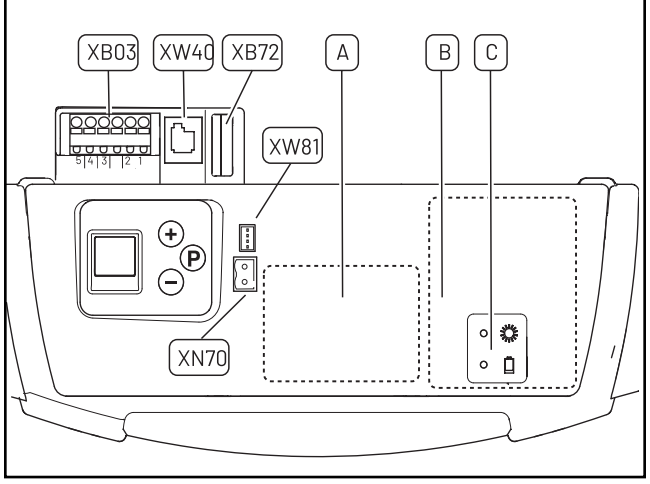

Fig. 45

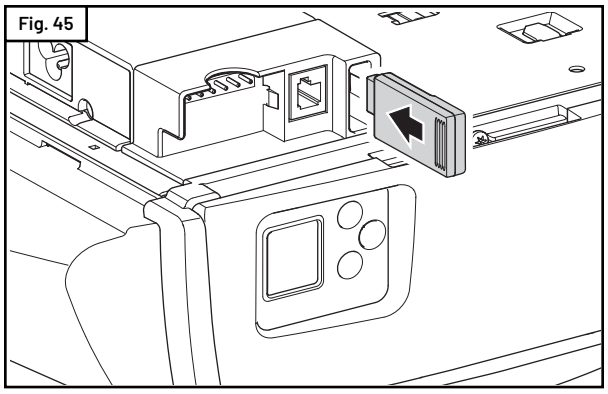

Fig. 46

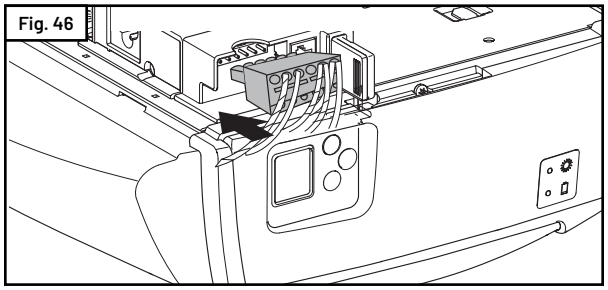

Fig. 47

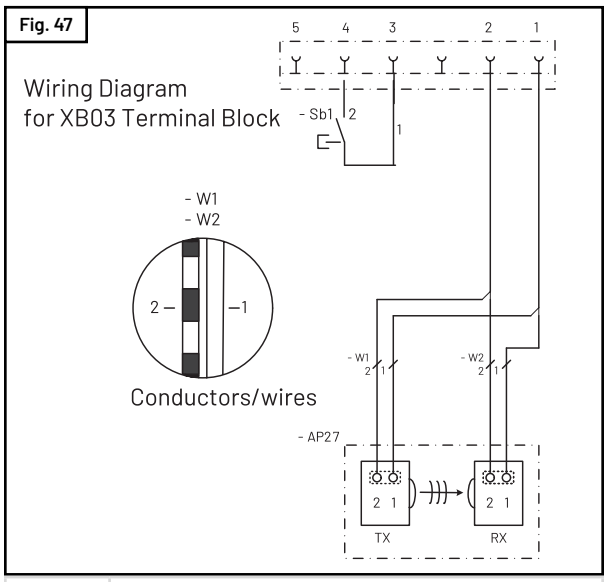

AP27	Photo eye safety system
RX	Photo eye receiver
TX	Battery backup display
1	Photo eye - Conductor 1
2	Photo eye - Conductor 2
Sb1	Impulse button - Wall Control
3	Wall control - Impulse - Conductor 1
4	Wall control - GROUND - Conductor 2
5	24 V DC

10. Connect to Power

To reduce the risk of electric shock, your operator is provided with an insulated power cord with a 3-prong grounding plug. The cord must be connected to a standard grounding outlet. If there is no outlet available at the location, you must have a qualified electrician install an approved grounded outlet in this area.

WARNING

To prevent electrocution or fire, installation and wiring must be done in accordance with local electrical and building codes. DO NOT use an extension cord. DO NOT use a 3 to 2 plug adapter. DO NOT modify or cut off the grounding pin on the plug.

- Plug the operator into a properly grounded outlet (Fig. 48).
- The display will illuminate the word "On" and will be displayed. This indicates that the operator is ready for set up. See Fig. 49B for additional display icons.
- DO NOT operate or run the opener at this time.

11. System Set Up

WARNING

In order to insure a trouble-free programming, the door must be in the "CLOSED" position and engaged to the drive system (rail) before programming the operator or a system reset is performed.

For proper initial operation of the operator, two basic functions must be set using the initial system programming:

- Open Door Position
- Close Door Position
- Program Remote Control (Transmitter)

Press and hold the Ⓟ button for approximately 3 seconds. When illuminates, release the button. You are now ready to set or change the desired adjustment. If no buttons are pressed within 120 seconds while in programming mode, the control unit reverts back to operating mode

TO MAKE OR CHANGE ANY ADJUSTMENT

If no changes are needed at any particular stage, you can keep the current information and "skip" over a specific adjustment by pressing the Ⓟ button once. This is useful to know if you want to change only one setting, without changing any of the other adjustments. Simply enter the adjustment mode by pressing and holding the Ⓟ button for approximately 2 seconds, then press and release Ⓟ repeatedly until your particular adjustment is reached. This bypasses the unneeded adjustments, and takes you right to the adjustment you want. When your adjustment or setting is complete, simply press Ⓟ as many times as needed to bypass the remaining steps and exit out of the program, returning the operator to normal mode.

NOTE: You may exit the System Set Up at any time by pressing the button Ⓟ for more then 5 sec. The set up programming can be terminated at any time and from any stage. To do so, press the Ⓟ button for longer than 5 seconds.

RESET FUNCTION

There might be times when the operator may have to reset in order to restore the operating system factory default setting. To reset operator by using three control buttons, ⊕, ⊖, Ⓟ (see Fig. 49A) or see section **12-1. Advanced Settings Programming Procedure (page 26)**.

Fig. 48

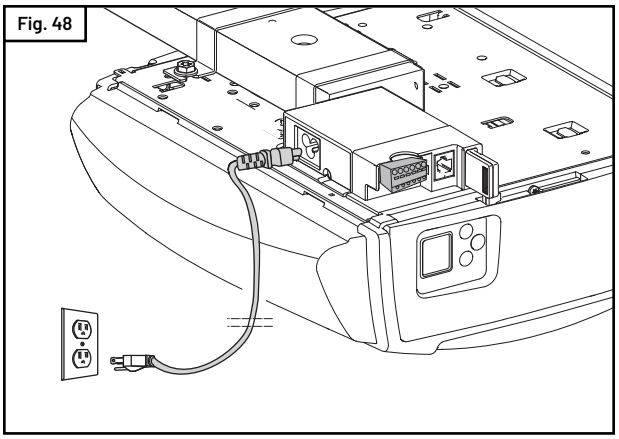

IMPORTANT: Replacement Power Cord

Part #105475
Model: YP-12/YC-12
Overall length 6ft.
UL/CSA Recognized
UL Type: E241374: SJT 3/C 18AWG 105 C 300V VW-1
CSA 177323: SJT 3/C 18AWG 105 C 300V FT2

Fig. 49

Overview of the control unit

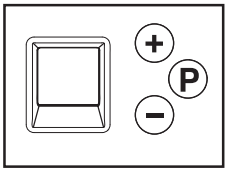

Control elements

LED display

- ⊕ Drive the door in the OPEN direction, Increase the value
- ⊖ Drive the door in the CLOSE direction, decrease the value
- Ⓟ Start programming, confirm and save values

Fig. 49A

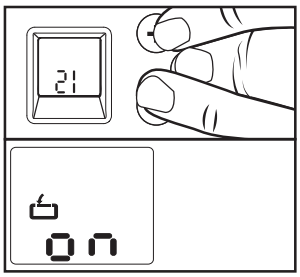

Press and hold at the same time all three control buttons, (⊕, ⊖, Ⓟ) as shown until counter reaches 21. Then depress buttons and let system reset.

Once the operator completes the Reset Process, The LCD display illuminates and stand-by mode is displayed as shown.

11. System Set Up (cont'd)

Fig. 49B

Display	Description
0 n	Ready for operation
	Door position: CLOSED
	Door position: OPEN
	Fault message / Maintenance indicator in CLOSED door position
	Photoeye safety system
	Remote control
	External button

Display	Description
3	Status display Battery backup system connected
1 2 3 4 5 6 7 8 9 0	Level indicator Display shows Level 2
1 2 3 4 5 6 7 8 9 0 8	Menu and parameter indicator (Displayed Menu 3, Parameter Setting 8)

Minute Indicator

Display	Description
1 2 3 4 5 6 7 8 9 0 1.2	Times exceeding one minute are shown in minutes and seconds. Example: 1.2 = 1 minute + 20 seconds = 80 seconds

Status Display

Display	Function / Element
4	Warning time indicator (only for programmed automatic closing)

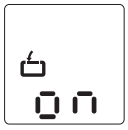

System initial display on control panel screen upon power ON

1. System set up start and program open door travel position	Control Panel Display
• To start the system set up, press and hold the Ⓟ button for approximately 5 seconds. • Once the display timer counter reaches the count of 5, release the Ⓟ button. • The blinking open door icon is displayed on the control panel screen. • Set the open door travel position by pressing and holding the ⊕ button until the door reaches the desired open travel position. Further fine tuning of the open position can be performed by using the ⊕ or ⊖ buttons. **Important Note: The back of the trolley must be approximately half inch from the reference bumper on rail.** • Once the desired open travel position is reached, press Ⓟ button to save open travel position and move to the next step in the system set up.	
2. Program close door travel position	
• The blinking closed door icon is displayed on the control panel screen. • Set the close door travel position by pressing and holding the ⊖ button until the door reaches the down travel position desired. **Important Note: In order to avoid unintentional door reversal, DO NOT set the down travel position too close to the floor where the door rubber seal is completely squeezed/compressed against the ground.** • Further fine tuning of the close travel position can be performed by using the ⊕ or ⊖ buttons. • Once the desired close travel position is reached press Ⓟ button to save the close travel position and move to the next step in the system set up.	
3. Program a remote control (transmitter)	
• The transmission icon will blink on the control panel display. This indicates the operator is ready to learn the remote control code. • Press and hold the button on the remote control that you wish to use. • The transmission icon will change its displayed symbol to a solid icon. This indicates that the remote control code has been successfully learned by operator. • Release the remote control button. • Press Ⓟ button to save remote control code and end the system set up.	

System display on control panel screen after setup is completed.

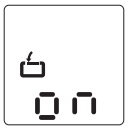

11. System Set Up (cont'd)

NORMAL OPERATION — IMPORTANT

On the first open travel activation, the trolley will make contact with and will rest against the rail bumper. This will appear as if the system (door) went past the set open travel limit. However, this is not the case. On the next open travel cycle, the system will recognize the program travel limit.

Every 10 full cycles the operator will perform a travel limit check and it will function as described on "Normal Operation" note.

IMPORTANT

Upon completion of the initial set up, the operator must be cycled for two complete cycles (complete cycle comprises of one uninterrupted up activation of the system and one uninterrupted down activation of the system)

Legend	
Drive the door in the OPEN direction, increase the value	⊕
Drive the door in the CLOSE direction, decrease the value	⊖
Start programming, confirm and save values	Ⓟ
The display flashes	
Display lights up	
Ready for operation	on
Door position: CLOSED	
Door position: OPEN	
Fault message/Maintenance indicator in CLOSED door position	
Photoeye safety system or closing edge safety device	
Remote control	
External button	

12. Advanced Settings

12-1. Advanced Settings Programming Procedure

Advanced Settings Programming Procedure
Example: Setting of Level 6, Menu 4

1.	Door should be in closed position. The control system operating mode will be displayed as shown.	on
2.	Press and hold Ⓟ button until counter passes number "**10**". Then release the Ⓟ button. Screen display as shown.	1 2 3 4 5 6 7 8 9 0
3.	Press ⊖ to select Level **6**. Screen display as shown.	1 2 3 4 5 6 7 8 9 0
4.	Press Ⓟ. Menu **1** will appear on display as shown.	1 2 3 4 5 6 7 8 9 0 16
5.	Press ⊕ to select Menu **4** (reset menu). Screen will display "**16**" as shown.	1 2 3 4 5 6 7 8 9 0 16
6.	Press and release Ⓟ. Number "**16**" blinks.	1 2 3 4 5 6 7 8 9 0 16
7.	Press and release ⊖ to change screen display. Number "**7**" will blink.	1 2 3 4 5 6 7 8 9 0 7
8.	Press and release Ⓟ. Save parameter setting.	
9.	Press Ⓟ for 5 seconds to exit advanced settings set up.	1 2 3 4 5 6 7 8 9 0

Repeat steps 2-8 to change other Menu parameters

12-2. General Overview of the Programmable Functions

CAUTION

Additional operator functions can be set using the advanced operator functions. Parameters factory default settings can be restored. This programming may only be carried out by a professional installer.

CAUTION

After a system reset, all parameters are restored to the factory settings.

- **All the required function in the initial set up and advanced settings must be re-programmed if it is required.**
- **The operator must be activated for two (2) complete uninterrupted cycles in order for all restored or operating parameters settings to be learned by the operator again.**

Level	Menu	Factory Default Setting
Level 1 — Basic Functions	Menu 3: Intermediate "OPEN Position"	
	Menu 8: RESET	
Level 2 — Operator Settings	Menu 1: "OPEN" position – operator (system) force	Setting 8
	Menu 2: "CLOSE" position – operator (system) force	Setting 8
	Menu 3: "OPEN" position – operator sensitivity	Setting 10
	Menu 4: "CLOSE" position – operator sensitivity	Setting 10
Level 3 — Disable		
Level 4 — Transmitter Additional Functions	Menu 2: "Intermediate "OPEN Position"	
Level 5 — Functions Overview	Menu 4: Light timer	Setting 4.1 (255 sec)
Level 6 — Variable Speed	Menu 1: OPEN speed	Setting 16
	Menu 2: Soft run OPEN speed	Setting 7
	Menu 3: Soft run OPEN position	
	Menu 4: CLOSE speed	Setting 16
	Menu 6: Soft run CLOSE speed	Setting 7
	Menu 8: Soft run CLOSE position	
Level 7 — Maintenance and Servicing	Menu 1: Door cycle counter	
	Menu 2: Servicing counter	
	Menu 3: Servicing interval	
	Menu 8: Reset maintenance and servicing	
	Menu 9: Fault indicator	
Level 8 — CLOSE Travel Position Pressure Sensitivity Adjustment (PSATM)	Menu 7: Force relief CLOSED door position	Setting 1 — Not active

12-2. In-depth Programmable Functions

Level 1 — Basic Functions

Menu 3	Intermediate OPEN Position
	Set using the (⊕ / OPEN) and (⊖ / CLOSE) buttons The closing function with automatic closing is possible. Only the intermediate position that was programmed last can be used.
Menu 8	**System RESET**
	Setting 1: No Reset Seting 2: Reset System Settings

Reset Procedure		
1.	Door should be in closed position. The control system operating mode will be displayed as shown.	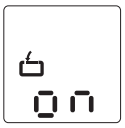
2.	Press and hold Ⓟ button until counter passes number "**10**". Then release the Ⓟ button. Screen display as shown.	
3.	Press ⊖ to select Level **1**. Screen display as shown.	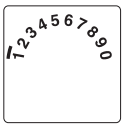
4.	Press Ⓟ. Menu **3** will appear on display as shown.	
5.	Press ⊕ to select Menu **8** (reset menu). Screen will display "**1**" as shown.	
6.	Press and release Ⓟ. Number "**1**" blinks.	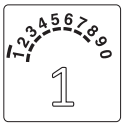
7.	Press and release ⊕ to change screen display. Number "**2**" will blink.	
8.	Press and release Ⓟ to reset operator. During reset the display screen will turn blank for a couple of seconds.	
9.	Upon completion of operator reset, the LCD display illuminates. Stand-by mode is displayed as shown.	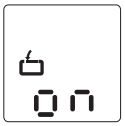
10.	**The operator must be set-up again as described in section 11. System Set Up (page 24).**	

IMPORTANT NOTE

Upon completion of the initial set up, the operator must be cycled for two complete cycles (completed cycle comprises of one uninterrupted up activation of the system and one uninterrupted down activation of the system).

Level 2 — Operator Settings

Menu 1: "OPEN" position operator (system) operating force (Default:8)								← Lower Force				Higher Force →
1	2	3	4	5	6	7	**8**	9	10	11	12	13
Menu 2: "CLOSE" position operator (system) operating force (Default:8)								← Lower Force				Higher Force →
1	2	3	4	5	6	7	**8**	9	10	11	12	13
Menu 3:"OPEN" position operator sensitivity (Default: 10)								← More Sensitive				Less Sensitive →
OFF	2	3	4	5	6	7	8	9	**10**	11	12	13
Menu 4:"CLOSE" position operator sensitivity (Default: 10)								← More Sensitive				Less Sensitive →
OFF	2	3	4	5	6	7	8	9	**10**	11	12	13

Level 4 — Transmitter Additional Functions

Menu 2	Intermediate OPEN Position
	Set using the (⊕ / OPEN) and (⊖ / CLOSE) buttons The closing function with automatic closing is possible. Only the intermediate position that was programmed last can be used.

Level 5 — Functions Overview

Menu 4: Operator Light "ON" → (Default: 4.1)

Timer (in seconds)										Timer (in minutes)					
2	5	10	15	20	25	30	35	40	50	1.2 (80sec)	1.4 (100sec)	2.0 (120sec)	2.3 150Sec)	3.0 (180sec)	**4.1 (255sec)**

Level 6 — Variable Speed

Menu 1: OPEN speed (Default: 16)											← Slower				Faster →
—	—	—	—	5	6	7	8	9	10	11	12	13	14	15	**16**

Menu 2: Soft run OPEN speed (Default: 7)											← Slower				Faster →
1	2	3	4	5	6	**7**	—	—	—	—	—	—	—	—	—

Menu 3: Soft run OPEN position

Set using the (⊕ / OPEN) and (⊖ / CLOSE) buttons

Menu 4: CLOSE speed (Default: 16)											← Slower				Faster →
—	—	—	—	5	6	7	8	9	10	11	12	13	14	15	**16**

Menu 6: Soft run CLOSE speed (Default: 7)											← Slower				Faster →
1	2	3	4	5	6	**7**	—	—	—	—	—	—	—	—	—

Menu 8: Soft run CLOSE position

Set using the (⊕ / OPEN) and (⊖ / CLOSE) buttons

Level 7 — Maintenance and Servicing

Menu 1	Door cycle counter	
	Six-figure indicator showing the number of comp lete cycles, up to 999999. Once the counter setting is reached, it restarts count again.	
Menu 2	**Servicing counter**	
	Five-figure indicator showing the number of comp l ete cycles left up to maintenance indication. Figures shown one after the other up to the indicator point, then repeated	
Menu 8	**Reset maintenance and servicing**	
	The fault log for maintenance, diagnostics and servicing work is reset here.	
	1	No Reset — Default Setting
	2	Reset the fault log
Menu 9	**Fault indicator**	
	Shows the current fault message. (No more than 16 fault messages can be viewed)	
	⊖	Display the previous fault / Navigate through the list of faults
	⊕	Navigate through the list of faults

Menu 3	Service/Maintenance Counter Setting	
	Adjustment of the number of door operations to be completed before a servicing reminder is displayed.	
	1	OFF — Default
	2	100 door operations
	3	500 door operations
	4	1,000 door operations
	5	4,000 door operations
	6	5,000 door operations
	7	6,000 door operations
	8	7,000 door operations
	9	8,000 door operations
	10	9,000 door operations
	11	10,000 door operations
	12	15,000 door operations
	13	20,000 door operations
	14	30,000 door operations
	15	40,000 door operations
	16	50,000 door operations

Level 8 — CLOSE Travel Position Pressure Sensitivity Adjustment (PSATM)		
Menu 7	**Reset maintenance and servicing**	
	1	Default — Not activated
	2	Short
	3	Medium
	4	Long

13. Remote Controls

WARNING

Danger of injury due to uncontrolled operation of the door!

- **Operate the controls or the hand transmitter only when there are no persons or objects in the path of the door.**
- **Ensure that the controls and the hand transmitter are never used by children or unauthorized persons.**
- **Ensure that the hand transmitter cannot be operated by accident (in a trouser pocket, for example).**

FCC Certified: This device complies with Part 15 of the FCC rules. Operation is subject to the following two conditions: (1) this device may not cause harmful interference, and (2) this device must accept any interference received, including interference that may cause undesired operation. Changes or modifications not expressly approved by the party responsible for compliance could void the user's authority to operate the equipment.

13-1. Transmitter

A family of state-of-the-art transmitters, each transmitter is custom encoded with installed battery. Offered in two styles to suit your personal preference. See Fig. 50.

- Mini (2-or 4-channel)
- Micro (2-channel)

TRANSMITTER MOUNTING

The transmitters can be conveniently mounted inside your car using the visor clip or on the wall using the mounting plate.

Visor Clip (Fig. 51)

- Snap visor clip into transmitter. Remove visor compartment cover.
- Affix assembly to visor.

Mounting Plate (Fig. 51A)

- Secure the mounting plate to area of preference using screw and anchor.
- Slide the transmitter into the mounting plate, which will hold it firmly in place.

MULTIPLE TRANSMITTERS (FIG. 52)

Each transmitter comes factory programmed with random codes. 2-channel transmitters have 2 different random codes, one per button. 4-channel transmitters have 4 different random codes, one per button. Transmitters that are purchased separately as accessories have random codes that must be changed in order to match the code of the "active" transmitter, which you are already using. Below are instructions for transferring an active code from a button on one transmitter to a button of your choice on another transmitter.

- Connect the transmitter with active code to the new transmitter using the programming connector. (Fig. 52)
- Press and hold the selected channel button on the transmitter with the active code.
- Press and hold the respective channel button on the new transmitter. The light in the transmitter initially starts blinking and then illuminates continuously after 1-2 sec. Code transfer is completed.
- Programming connector can be removed and both transmitters can now be used to operate the same opener.

Fig. 50

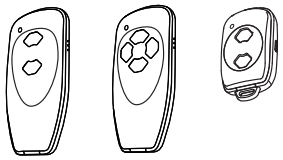

Fig. 51

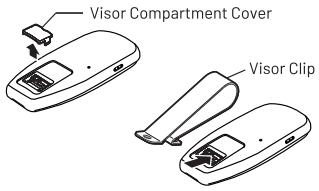

Fig. 51A

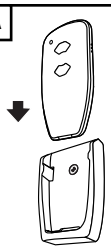

Fig. 52

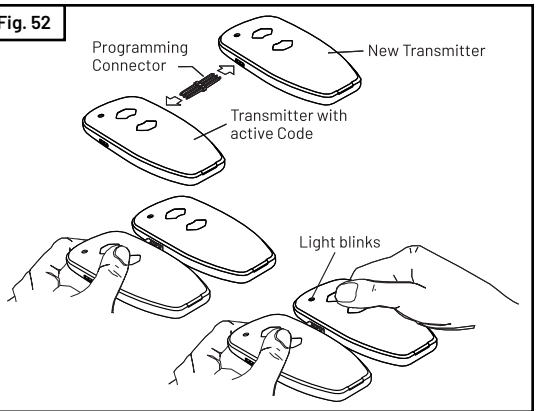

NOTE: For multi-button transmitters, be sure to carry out this procedure for all the buttons you desire to use.

CHANGING THE CODE (FIG. 52A)

The transmitter factory preset code can be changed as follows:

- Insert the programming connector into transmitter terminal.
- Short one of the outer pins of the programming connector with the middle pin.
- Press and hold the respective channel button. The light will blink rapidly for approximately 5 sec. Release the button after the light illuminates continuously. Code will change in approximately 2 seconds.
- Remove the programming connector.
- Once the transmitter code is changed, the operator must be recoded with the new transmitter code as described in section **11. System Set Up (page 24)**.

Fig. 52A

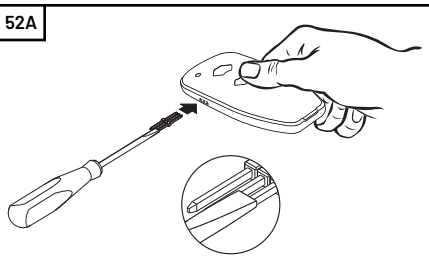

NOTE: For multi-button transmitters, be sure to carry out this procedure for all the buttons you desire to use.

BATTERY REPLACEMENT (FIG. 53)

- Open transmitter.
- Insert a 3V battery (type CR2032) as shown.
- Close the transmitter.

NOTE: Replace batteries with same type CR2032 only.
Do not dispose of batteries in household waste!

Fig. 53

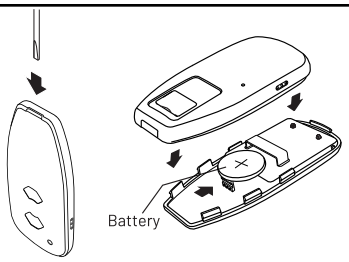

WARNING

To prevent possible SERIOUS INJURY or DEATH:

- **NEVER allow small children near batteries**
- **If battery is swallowed, immediately notify doctor.**

To reduce risk of fire, explosion, or chemical burn:

- **Replace ONLY with 3V CR2032 batteries.**
- **DO NOT recharge, disassemble, heat above 212°F (100°C) or incinerate.**

Fig. 54

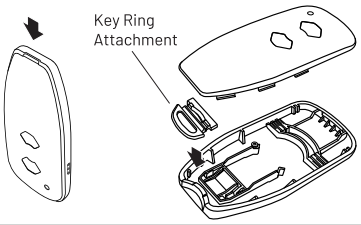

KEYRING ATTACHMENT (FIG. 54)

- Open transmitter.
- Snap in key ring attachment.
- Close the transmitter

13-2. Wireless Keyless Entry System (Optional Accessory)

The Wireless Keyless Entry System offers you the convenience of opening and closing your garage door by entering your own 4-digit Personal Identification Number (PIN) via the keypad. The WKE can be programmed wireless to control up to 4 garage door operators that each work on a different code, or to control one garage door operator with up to 4 different PINs. You can also program it to allow a temporary PIN of your choice to be stored, to provide temporary access to authorized visitors or service people.

WARNING

To prevent possible SERIOUS INJURY or DEATH from a moving garage door:

- **Install Wireless Keyless Entry System within sight of the garage door, out of reach of children at a minimum height of 5 feet (1.5m) and away from ALL moving parts of the door.**
- **ALWAYS keep remote controls out of reach of children. NEVER permit children to operate, or play with remote controls.**
- **Activate door ONLY when it can be seen clearly, is properly adjusted, and there are no obstructions to door travel.**
- **ALWAYS keep garage door in sight until completely closed. NEVER permit anyone to cross path of moving door.**

13-2. Wireless Keyless Entry System (cont'd)

PROGRAM PIN AND TRANSFER CODE

- Install batteries provided in WKE.
- Press and hold "**3**" button for at least 3 seconds to activate programming mode, **LED's light up for 10 seconds**.
- Immediately, aim the top of transmitter very close to buttons "**5**" and "**6**".
- Press and hold button you use to operate the door and move transmitter slowly down toward the number "**8**" and "**9**" button area. **Release transmitter button when LED's on keypad flash.**
- Immediately, enter a 4-digit personal identification number (PIN) of your choice # # # #.
- Immediately, press and release the **ENTER** button. LED's and keypad buttons will light up for 2 seconds signaling programming is completed.
- Test WKE by entering the PIN, then press **ENTER** button.

NOTE: To program the WKE to more than one garage door operator (maximum 4), repeat the steps above using a new PIN for each additional garage door operator.

CHANGE AN EXISTING PIN

- Press "**0**" button for at least 3 seconds, LED's will flash slowly. Release "**0**" button.
- Enter the programmed PIN that you want to change. Press the **ENTER** button. LED's will flash rapidly.
- Enter the new 4-digit PIN of your choice # # # # then press the **ENTER** button. **LED's and keypad light up for 2 seconds.**
- To test WKE, enter the new PIN then press the **ENTER** button. The garage door opener will activate.

PROGRAM A TEMPORARY PIN

A temporary 4-digit PIN can be programmed to allow access to visitors. Each programmed PIN can program one temporary PIN. The temporary PIN can be set for a number of door openings (max 99). The temporary PIN cannot be the same as any previously programmed PIN.

- Press "**1**" button for at least 3 seconds. **LED's will flash slowly for 10 seconds.**
  NOTE: To successfully establish a temporary pin, steps 2-4 must be completed within 10 seconds after programming activation.
- Enter any programmed PIN, then press **ENTER** button. **LED's will flash rapidly.**
- Enter the temporary 4-digit PIN of your choice # # # # then press the **ENTER** button. **LED's will flash very rapidly.**
- Press the number of openings the temporary PIN will work (up to 99). Then press the **ENTER** button. **LED's and key pad buttons light up for 2 seconds then system goes in stand-by mode.**

NOTE: To clear the temporary PIN, repeat steps 1-3 above, setting the number of openings to "0" in step 4.

To test, enter the temporary PIN, then press the ENTER button. The garage door operator will activate. If the temporary PIN was set for a number of openings, the test will use up one opening programmed PIN.

CLEARING WKE MEMORY

- Remove Wireless Keyless from wall mounting plate.
- Remove batteries from Wireless Keyless.
- Press and hold **ENTER** button.
- Install batteries back. Match polarity designation.
- Release **ENTER** button, LED flash rapidly approximately 5 seconds.

Fig. 55

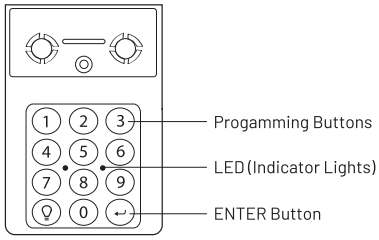

Fig. 56

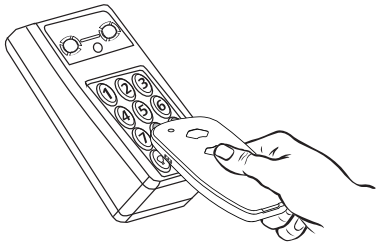

INSTALLATION

- Select a location to mount the Keyless Entry at a minimum height of 5 feet (1.5m) out of the reach of children.
- Use mounting plate as template, mark hole location and then drill two 1/8 inch (3.2mm) pilot holes.
- Secure plate to the mounting surface with the (2) screws provided. Do not over-tighten screws to avoid cracking the plastic.
- Cover batteries with battery cover.
- Snap WKE into the mounting plate and secure with screw provided. See Fig. 57.
- Install slide-up protective cover. Align cover slides with slide grooves on WKE and slide cover down until it locks.

Fig. 57

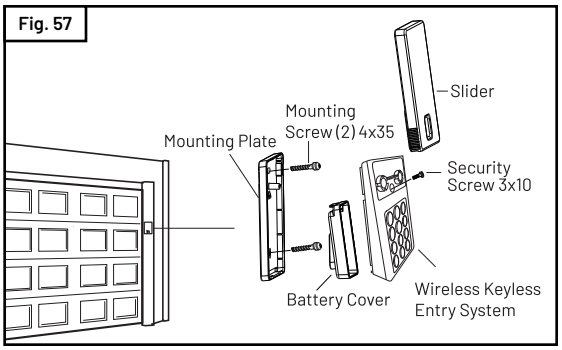

Fig. 58

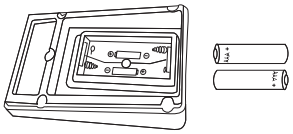

BATTERY

WARNING

To prevent possible SERIOUS INJURY or DEATH: NEVER allow small children near batteries. If battery is swallowed, immediately notify doctor.

Low Battery Indicator: Replace the batteries (AAA) when all the keypad buttons start to flash (10 seconds) upon raising the Wireless Keyless protective cover.

Note: Replace batteries with type AAA only. Do not dispose of batteries in household waste.

14. Operation of Your Operator

The garage door operator can be activated through the following accessories:

WIRELESS KEYLESS ENTRY SYSTEM

The garage door operator activates when the PIN and **ENTER** ⏎ button are pressed. The keypad will blink for 28 seconds, during that time the **ENTER** ⏎ button can be used to stop, start, reverse the door.

If the wrong number is accidentally pressed, press the correct PIN then the **ENTER** ⏎ button. The Keyless Entry will transmit only the last four digits.

ONE-BUTTON-TO-CLOSE

The Keyless Entry has a feature that allows the door to be closed using the **ENTER** ⏎ button instead of a PIN. **NOTE: Factory setting-active.**

To deactivate the one button close feature:

- Press the "**8**" button for 3 seconds. LED on keypad flash slowly.
- Press the **ENTER** ⏎ button.
- The keypad LED's light up for 2 seconds indicating that the one button close feature has been deactivated.

To activate the one button close feature:

- Press the "**9**" button for 3 seconds. LED on keypad flash slowly.
- Press the **ENTER** ⏎ button.
- The keypad LED's light up for 2 seconds indicating that the one button close feature has been activated.

REMOTE CONTROL TRANSMITTER

- To open or close garage door, press and hold designated button (Transmitter has an indicator light that will illuminate). See Fig. 59. When garage door begins to move, release button.
- To stop garage door during travel, press and hold button until door stops, then release button.
- To resume garage door travel after stopping, press button again. Door begins to move in the opposite direction.

Fig. 59

Operating the door using a hand transmitter			
1.		The control system is in operating mode.	on
2.		Impulse The door moves in the OPEN direction	on
3.		Impulse The operator system stops	on
4.		Impulse The door moves in the oposite direction (CLOSE direction).	on

14. Operation of Your Operator (cont'd)

WALL CONTROL PANEL

- The Door Pushbutton will light when Wall Control properly connected (if it does not light up, review section **8-14. Install Wall Control Panel (page 22).**
- To open or close garage door, press and hold Illuminated Door Pushbutton. See Fig. 60. When garage door begins to move, release button.
- To stop garage door during travel, press and hold button until door stops, then release button.
- To resume garage door travel after stopping it, press button again. Door begins to move in the opposite direction.
- The Light On / Off button can be used to turn lights on or off.
  NOTE: The operator light will dim down when turned off
- When using the light On / Off button, the automatic timer is ignored, and the lights will remain on until the button is pressed again, or until the operator is activated and the automatic timer begins again.
- The Lock/Vacation button can be used to lock out all remote control transmitters. The door can still be activated by wall control panel or keyless entry system. Press and hold Lock/Vacation button for 2-3 seconds. Release button. Illuminated Door Pushbutton and external button symbol on display screen will flash continuously while lock mode is active (Fig. 60A). To unlock opener, press and hold Lock/Vacation button for 2-3 seconds.

IMPORTANT NOTE

By pressing and holding the door activation button for one second or longer will disengaged the vacation lock mode.

OPERATOR LIGHT

- Light will come on whenever operator is activated. The default factory setting for the light to stay "on" is 4 minutes and 15 sec., or until the Light On / Off button on the wall control panel is pressed, whichever is sooner.
- Light can be turned on and off manually as described under operation of wall control panel.
- Light will flash when the operator senses an obstruction either detected by the internal safety system or the photo eye sensors. To stop light from flashing, remove obstruction and operate door normally. The fault light indicator will flash for the set light time "on" factory default setting of 4 minutes 15 sec. maximum.

Fig. 60

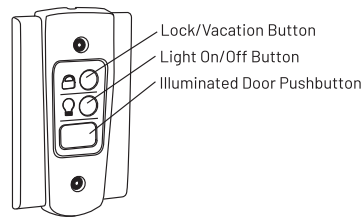

Fig. 60A

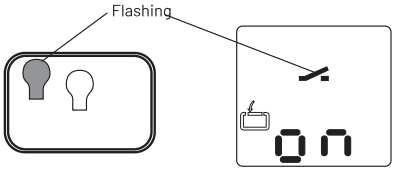

15. HomeLink® Transceiver

Before you can use your car's HomeLink® device to open a garage door you must transfer an active code from the transmitter to the HomeLink® Universal transceiver. (Reference — HomeLink® Manual) (See Fig. 61)

- Clear memory in HomeLink® transceiver per manufacturer instructions.
- Make sure the door path is clear and the door is in the line of site at all time during the set up.
- Start the programming sequence by pressing the transmitter button and the HomeLink® transceiver button on console simultaneously. Follow manufacturer instructions to complete programing sequence. **No learn button on the operator is required to be pressed.**
- Repeat steps above for the other channels available.

Fig. 61

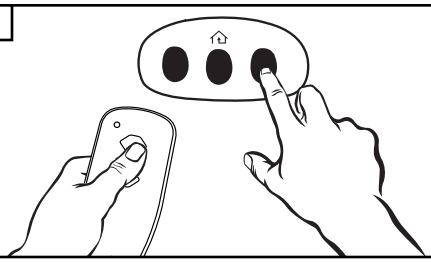

16. Test Safety Reversal

The safety reversal function of your operator is an extremely important feature of your operator. Testing this function ensures the correct operation of your operator and door.

The reversal system test should be performed

- Once per month.
- Anytime the travel or force limits are reset or changed.

Once the adjustments have been set and the door has been run up and down twice to "learn" the new settings, you must test the reversal system for proper operation.

- Place a 1-1/2" (40mm) high rigid object (or a 2x4 board laid flat) on the floor directly in the path of the door. See Fig. 62.
- Start the door in the downward direction and watch what happens.
- When door contacts the object (or 2x4), it should stop, reverse, and automatically return to the fully opened position.
- If the door does not reverse, reset the down travel limit so that the door travels slightly further down in the closed direction. Then, retest the unit as described above.
- If the door still does not reverse, disconnect your operator and call a service person.

Fig. 62

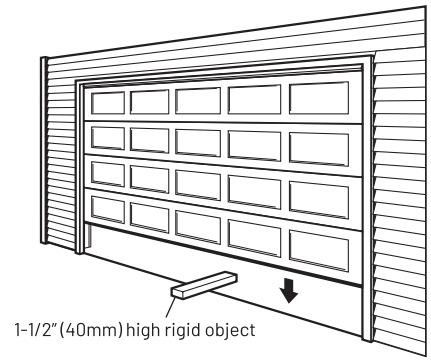

17. Align and Test Photo Eye Sensors

PHOTO EYE SENSORS ALIGNMENT

The photo eye sensors maintain an invisible, unbroken beam between each other. See Fig. 63.

NOTE: Sensor alignment must be done with the door in the closed position in order to ensure proper visibility of the sensor indicator LED.

- When the photo eye system is connected to the operator and the power is on, the green light on the transmitter sensor flashes, if the sensors are not aligned. When the sensors are aligned, the green light on the transmitter sensor will turn steady. See Fig. 64.
- Sensors must be installed parallel to the door plane and make sure the sensors are facing each other.

NOTE: After the sensors have been properly aligned, make sure that the system operation and safety tests outlined by the garage door opener manufacturer have been verified.

SAFETY TEST:

Photo eye sensors installed on opposite sides of your door opening are intended to detect a person or object in the path of the door and prevent the door from moving downward.

The following steps will determine if the system is functioning properly:

- Open door using the operator's transmitter or wall control.
- Place a box or other object in the path of the door so it breaks the photo eye beam. See Fig. 65.
- Press and release the wall control button. The door should not move in the down direction. If this does not happen, disconnect operator and call for service.
- To reset operator, remove the obstruction and operate the door normally.
- If photo eye sensors are not aligned or are damaged, door can only be closed by pressing and holding wall control button until door is fully closed.

Fig. 63

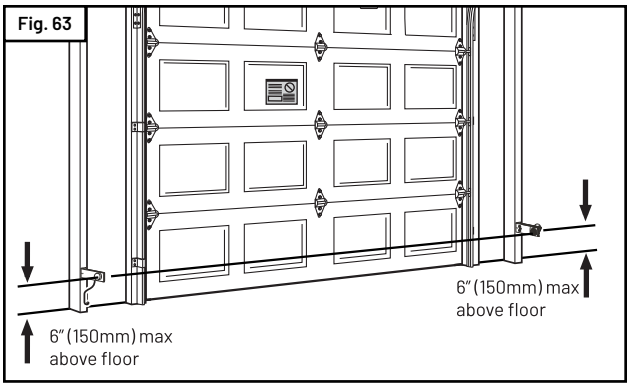

Fig. 64

Clear Path between Photo Eye Sensors

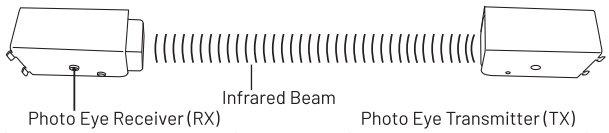

Fig. 65

Object directly in Path between Photo Eye Sensors

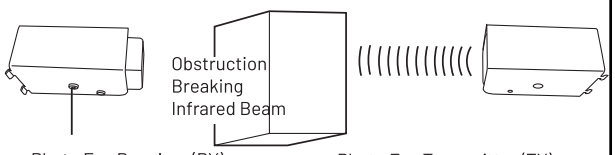

18. Apply Labels to inside of Garage

Several important safety and instruction labels are included with your operator package. These labels must be posted inside your garage where they can be easily seen by all. We recommend installing them in the location shown in section **20. Important Safety Instructions (page 37)**. To affix the labels, peel off the protective backing, and stick onto smooth, clean surface. If labels don't adhere well to surface, use tacks (wood door only) or additional adhesive to securely affix in place.
DO NOT PAINT OVER ANY LABELS.

19. Attach Owner's Manual to Wall

It is important that the manual be stored where it can be referred to later in case adjustments need to be made, and / or new controls or accessories added. Store the manual in a safe, easily accessible location. We recommend you use an envelope with an eyelet to store the manual in the garage on a nail or hook on the wall near the wall control.

20. Important Safety Instructions

IMPORTANT INSTALLATION INSTRUCTIONS

WARNING

TO REDUCE THE RISK OF SEVERE INJURY OR DEATH:

1. **READ AND FOLLOW ALL WARNINGS AND INSTALLATION INSTRUCTIONS.**
2. Never let children operate or play with door controls. Keep the remote control away from children.
3. Always keep the moving door in sight and away from people and objects until it is completely closed. **NO ONE SHOULD CROSS THE PATH OF THE MOVING DOOR**.
4. **NEVER GO UNDER A STOPPED, PARTIALLY OPEN DOOR.**
5. Test door operator monthly. The garage door MUST reverse on contact with a 1-1/2" (40mm) high object (or a 2x4 laid flat) on the floor. After adjusting either the force or the limit of travel, retest the door operator. Failure to adjust the operator properly may cause severe injury or death.
6. If possible, use the emergency release only when the door is closed. Use caution when using this release with the door open. Weak or broken springs may allow the door to fall rapidly, causing severe injury or death.
7. **KEEP GARAGE DOORS PROPERLY BALANCED**. See Garage Door Owner's Manual. An improperly balanced door could cause severe injury or death. Have a qualified service person make repairs to cables, spring assemblies, and other hardware.
8. Disconnect the electrical power to the garage door operator before making any repairs or removing the housing cover.
9. **SAVE THESE INSTRUCTIONS** for future safety, adjustment, and maintenance purposes.

21. Tension Adjustment

Your preassembled rail comes with the tension adjusted to factory specifications. There should be no need for further adjustment. However, if exposed or subjected to unusually harsh operating conditions, the tension may need to be readjusted during the life of the opener.

CHECK PROPER TENSION (FIG. 66A):

- Release trolley from belt or chain, then examine the setting of the tension adjustment at the header end of the rail.
- Proper tension is set when the tension nut is tightened just enough so that the washer will be spaced approximately 16.5mm or 21/32" from the stationary rail end-stop arch.
- If the gap between the washer and the rail end-stop arch is too big or too small, the tension needs to be adjusted.

ADJUST THE TENSION (FIG. 66B):

- To increase the tension and tighten the belt or chain, turn the tension nut clockwise with a 10mm wrench until the washer is spaced properly from the rail end-stop arch.
- Make sure the black sleeve rotates freely.
- To loosen the tension, turn nut counterclockwise.
- Reattach trolley.

Fig. 66A

Proper Tension Adjustment

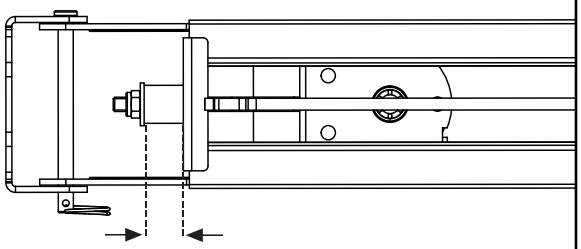

Proper Space 16.5mm +/- 0.5 or approximately 21/32"

Fig. 66B

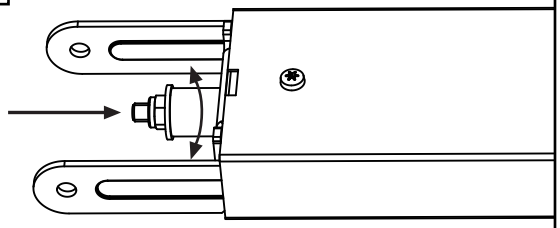

22. Rail Length Adjustment

FOR PROFESSIONAL INSTALLERS ONLY
If your particular installation calls for a shorter rail than the standard length provided, it is possible to shorten the rail.

NOTE: Shortening rail too much may result in door travel length reduction and door not opening fully. This depends on door size and configuration. Carefully plan all such modifications before proceeding. **THIS PROCEDURE SHOULD BE PERFORMED ONLY BY A PROFESSIONAL INSTALLER FULLY FAMILIAR WITH THIS TYPE OF OPENER SYSTEM.**

TO SHORTEN BELT RAIL LENGTH (FIG. 67)

- Loosen belt tension as much as possible.
- Remove screw from rail end-stop.
- Disassemble belt connector to expose free ends of belt.
- Slide belt and all rail parts out of rail from header end. See rail exploded view, Fig. 68 for disassembly details.
- Measure and cut off excess rail from header end.
- Using rail end-stop as a guide, mark and drill a 3/16" hole for rail end-stop screw.
- Using double excess rail measurement, cut off belt from one free end of the belt.
- Slide all rail parts into rail from header end according to original assembly and fit belt through sprocket holder (Fig. 67).
- Reassemble belt connector (Fig. 67).
- Tension belt properly (Fig. 66B).
- Check rail for proper assembly and operation by manually moving trolley from end to end with trolley connected to belt.

Fig. 67

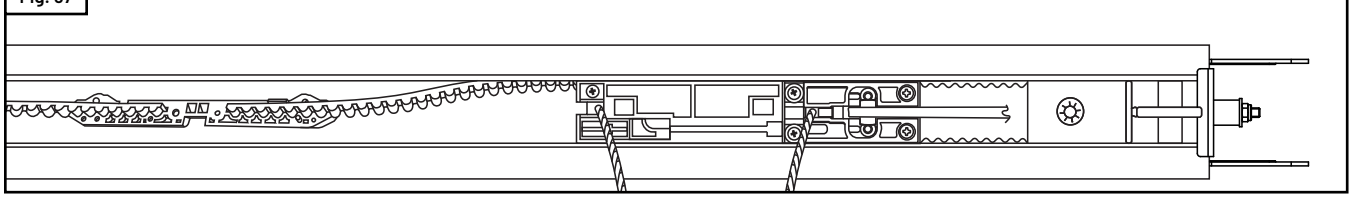

23. Rail Parts

23-1. Standard Rail Assembly

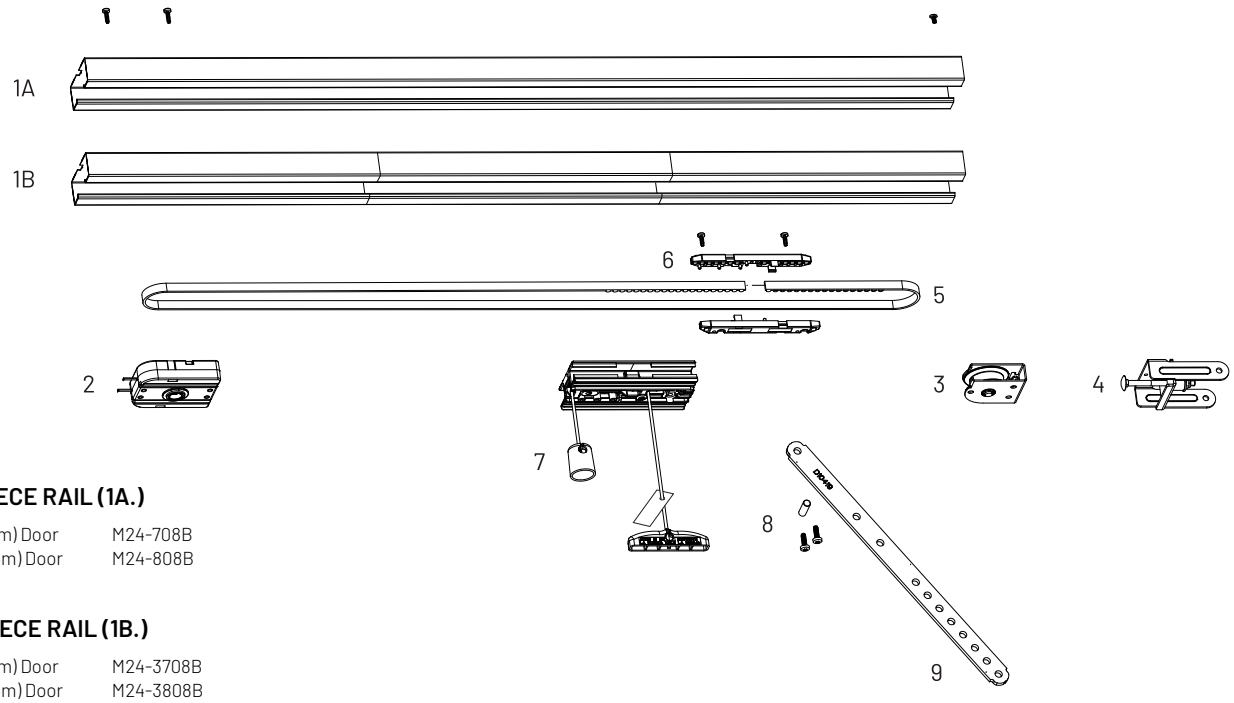

1-PIECE RAIL (1A.)

7' (2.1m) Door M24-708B
8' (2.4m) Door M24-808B

3-PIECE RAIL (1B.)

7' (2.1m) Door M24-3708B
8' (2.4m) Door M24-3808B

Item	Part #	Description
1A.	———	1-piece rail
1B.	———	3-piece rail set
2.	198416	Sprocket holder assembly
	106141	Shaft adapter
3.	198418	Roller holder assembly
4.	———	Rail end assembly

Item	Part #	Description
5.	———	Belt
6.	———	Belt connector
7.	194094	Trolley with belt connector
8.	165784	Pin
9.	188818	Straight door arm

23. Rail Parts (cont'd)

23-2. Heavy Duty Rail Assembly

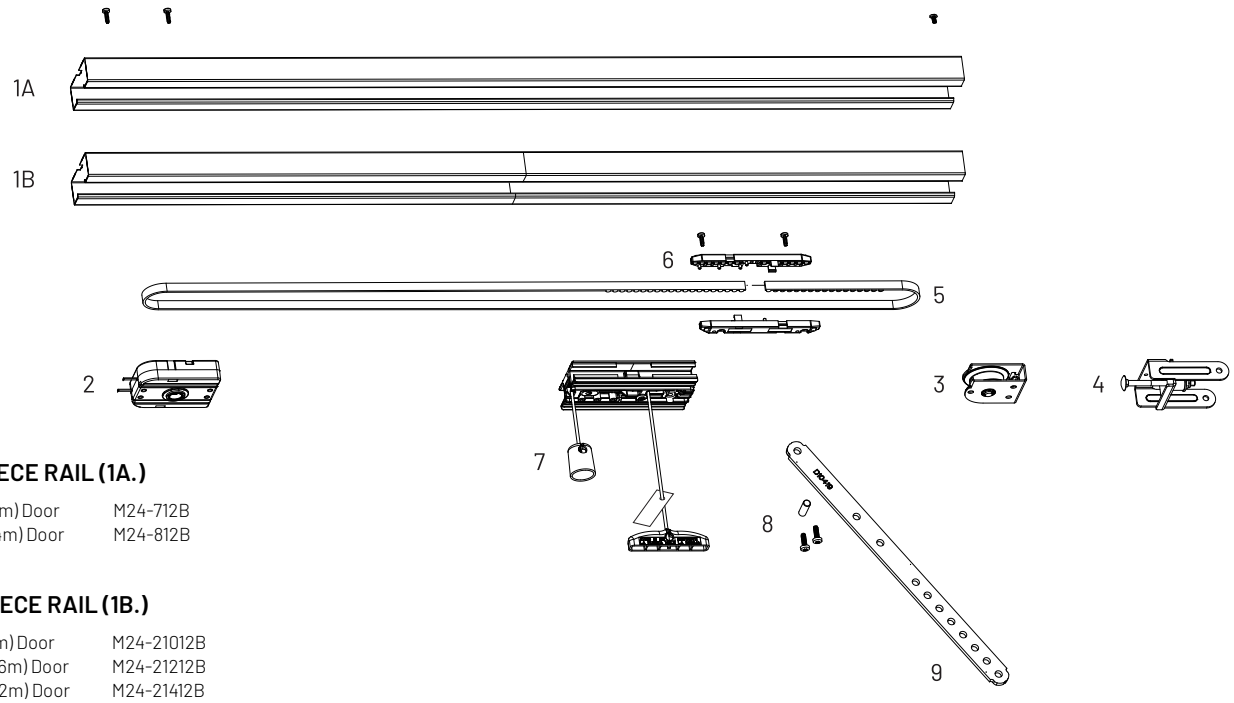

1-PIECE RAIL (1A.)

7' (2.1m) Door	M24-712B
8' (2.4m) Door	M24-812B

2-PIECE RAIL (1B.)

10' (3m) Door	M24-21012B
12' (3.6m) Door	M24-21212B
14' (4.2m) Door	M24-21412B

Item	Part #	Description
1A.	———	1-piece rail
1B.	———	2-piece rail set
2.	198417	Sprocket holder assembly
	106141	Shaft adapter
3.	198420	Roller holder assembly
4.	———	Rail end assembly

Item	Part #	Description
5.	———	Belt
6.	———	Belt connector
7.	194094	Trolley with belt connector (7', 8', and 10' doors)
	194095	Trolley with belt connector (12' and 14' doors)
8.	165784	Pin
9.	188818	Straight door arm

24. Operator Parts

24-1. Synergy 300 Series

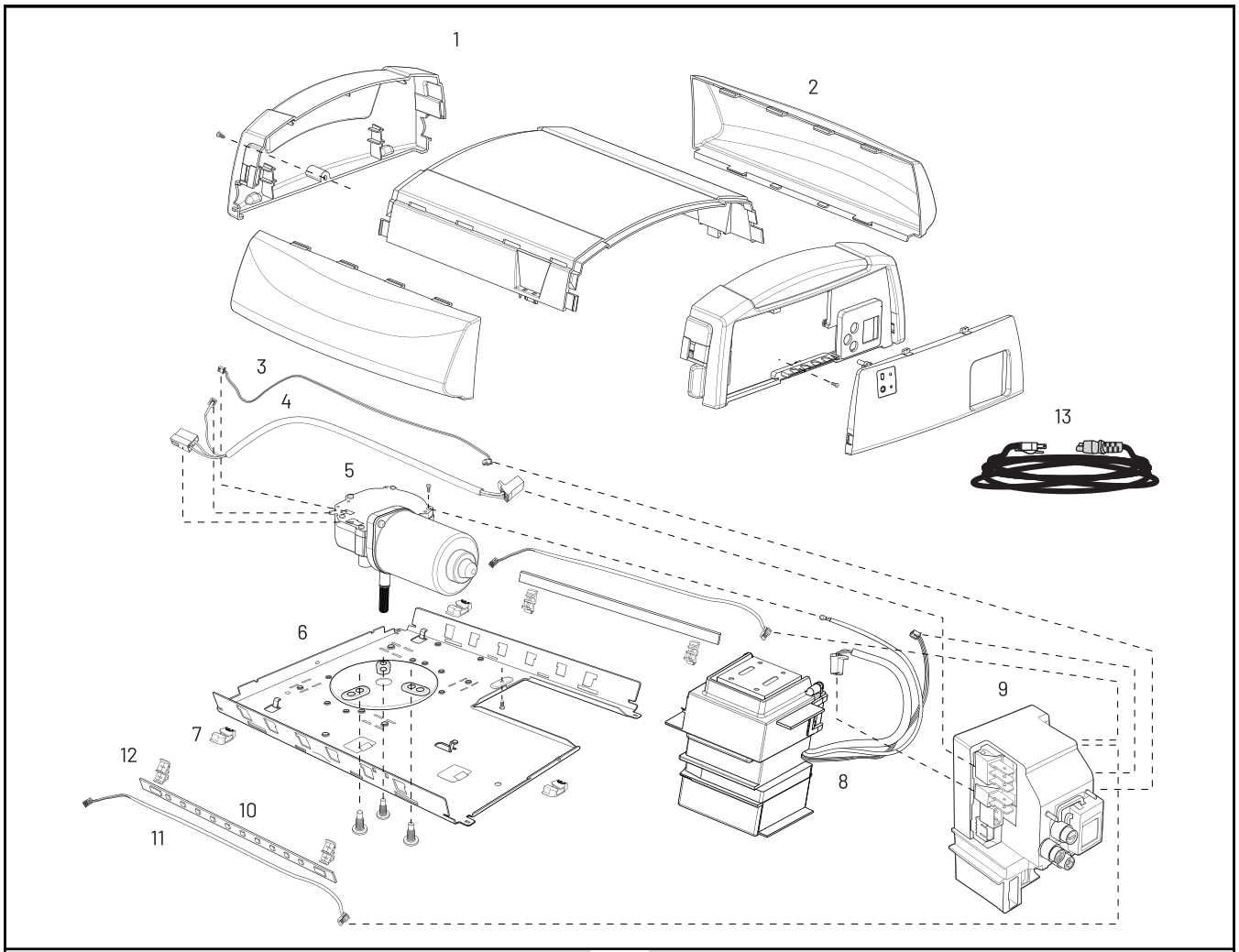

Item	Part #	Description
1.	———	Housing set
2.	116350	Lens cover set
3.	———	Wire (motor / control box)
4.	———	Wire harness (motor / control box)
5.	102277	Gearmotor (360 / 370)
	102278	Gearmotor (380)
6.	———	Chassis
7.	———	Wire holder

Item	Part #	Description
8.	122945	Transformer box (360)
	105470	Transformer box (370 / 380)
9.	197964	Control box
10..	198646	LED strip set
11.	———	Wire (LED strip / control box)
12.	98668	LED holder
13.	105475	Detachable Power Cord

24. Operator Parts (cont'd)

24-2. Synergy 200 Series

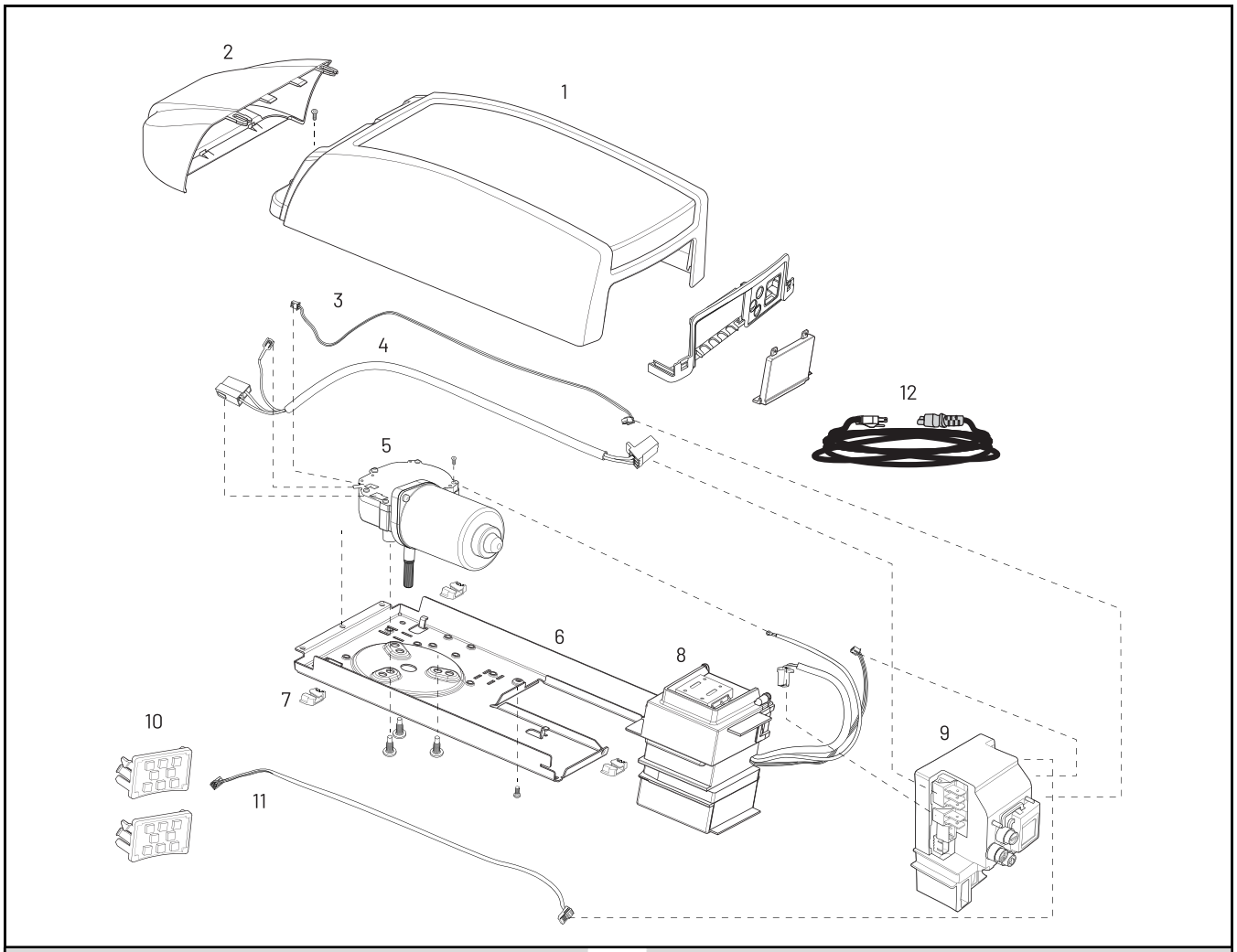

Item	Part #	Description
1.	———	Housing set
2.	115600	Lens cover set
3.	———	Wire (motor / control box)
4.	———	Wire harness (motor / control box)
5.	102276	Gearmotor (260)
	102278	Gearmotor (270 / 280)
6.	———	Chassis

Item	Part #	Description
7.	———	Wire holder
8.	105469	Transformer box (260 / 270)
	122945	Transformer box (280)
9.	197963	Control box
10.	101160	LED cluster
11.	———	Wire (LED cluster / control box)
12.	105475	Detachable Power Cord

25. Accessories

Accessories available at www.marantecamerica.com and also by contacting Marantec Customer Service at 1-888-622-2489.

Mini & Micro Transmitters
(Battery and visor clip included)

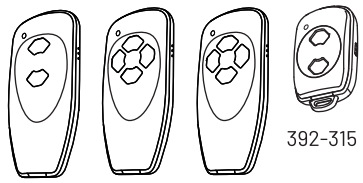

382-315 384-315 384-315HG

MINI Transmitter Mounting Plate

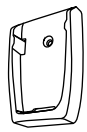

M16-920

Wall Control Panel

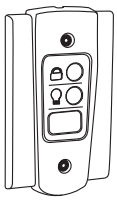

M3-543

Wireless Wall Control

P/N: 165917

Wireless Keyless Entry System

M13-631

maveo BlueFi Stick

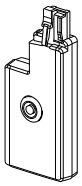

P/N: 185002

Photo Eye Safety System
M8-705

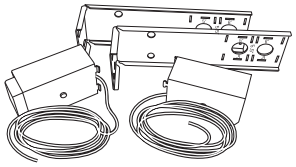

P/N: 97246

Energy Pack 100

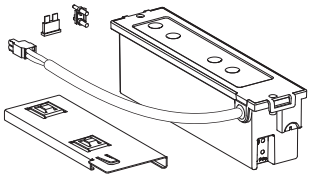

P/N: 189945

Automatic Timer-to-Close
ATC 100

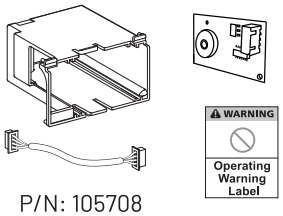

P/N: 105708

25-1. LED EL 300

WARNING

DANGER OF ELECTRIC SHOCK:

Before any wiring work begin, make sure that the operator and all wiring is disconnected from the power supply. During wiring make sure all wires remain disconnected from the power supply at all times.

LED STRIPS REPLACEMENT

- Disconnect power cord from operator (Fig. 69).
- Remove lens covers.
- Remove LED strip from holders and detach from wire (Fig. 70).
- Attach replacement srip to wire and snap into holders (Fig. 70).
- Replace lens cover.
- Connect power cord to operator.

Fig. 68

LED Strips
P/N: 198646

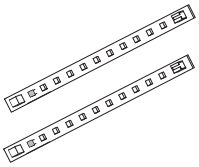

Fig. 69

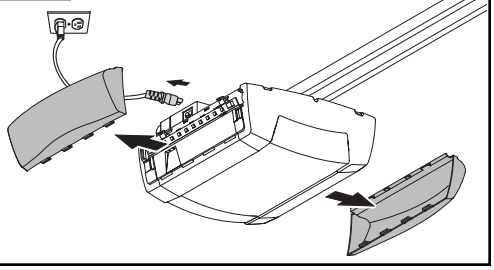

Fig. 70

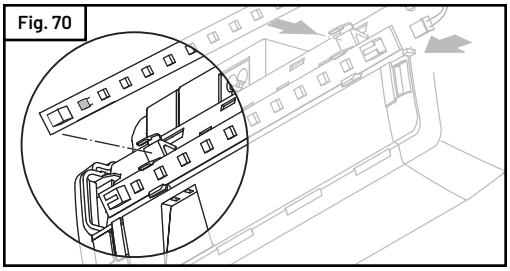

25-2. LED EL 200

WARNING

DANGER OF ELECTRIC SHOCK:

Before any wiring work begin, make sure that the operator and all wiring is disconnected from the power supply. During wiring make sure all wires remain disconnected from the power supply at all times.

Fig. 71

LED Strips
P/N: 101160

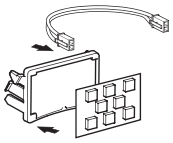

Fig. 72

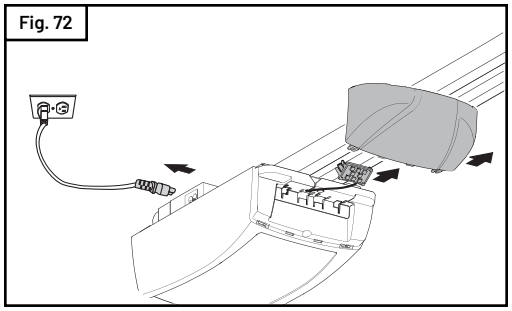

Fig. 73

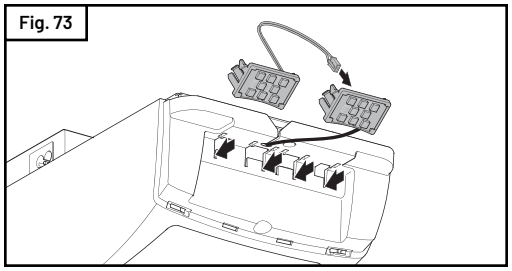

ASSEMBLE LED CLUSTER (FIG. 71):

- Snap LED board into cluster holder.
- Attach cable to LED board.

LED CLUSTER REPLACEMENT:

- Disconnect power cord from operator (Fig. 72).
- Remove lens cover.
- Disconnect burned out LED cluster from operator's housing and second cluster.
- Attach new cluster to existing cluster (Fig. 73).
- Snap clusters in operator's housing.
- Replace lens cover.
- Connect power cord to operator.

25-3. Energy pack 100 (Battery Backup) Installation

WARNING

IMPORTANT INSTALLATION INSTRUCTIONS TO REDUCE THE RISK OF SEVERE INJURY OR DEATH:

GARAGE DOOR OPERATORS WITH A BATTERY BACKUP (BBU) SYSTEM ARE "NOT DESIGNED TO SERVE AS A LIFE SAFETY DEVICE"

1. **READ AND FOLLOW ALL WARNINGS AND INSTALLATION INSTRUCTIONS.**
2. Use only the following **Model WP1.2-12 (Sealed cell, lead acid batteries with pressure release vents) and battery(ies) size 12V 1.2Ah.**
3. Do not dispose of the battery(ies) in fire. The cells may explode. Check with local codes for possible disposal instructions. Note: not applicable for battery(ies) not intended to be replaced.
4. Do not open or mutilate the battery(ies). Released electrolyte is corrosive and may cause damage to the eyes or skin. It may be toxic if swallowed.
5. Exercise care in handling battery in order not to short the battery with conducting materials such as rings, bracelets,and keys.
6. Change the battery(ies) provided with or identified for use with this product only in accordance with the instructions and limitations specified in this manual.
7. Observe proper polarity orientation between the battery(ies) and changing circuit.
8. Do not mix battery(ies) of different sizes or from different manufacturers in this product
9. A battery-operated product employing a secondary supply intended to be charged within the product shall contain specific instructions concerning the proper method of charging.

25-3. Energy pack 100 (Battery Backup)(cont'd)

WARNING

To reduce the risk of FIRE or INJURY:

- **Disconnect ALL electric and battery power BEFORE performing ANY service or maintenance.**
- **For continued protection against fire, replace FUSE only with Type Littlefuse Blade Fuse Series 257 rated 15 Amps, 32VDC**
- **ALWAYS wear protective gloves and eye protection when changing the battery or working around the battery compartment.**

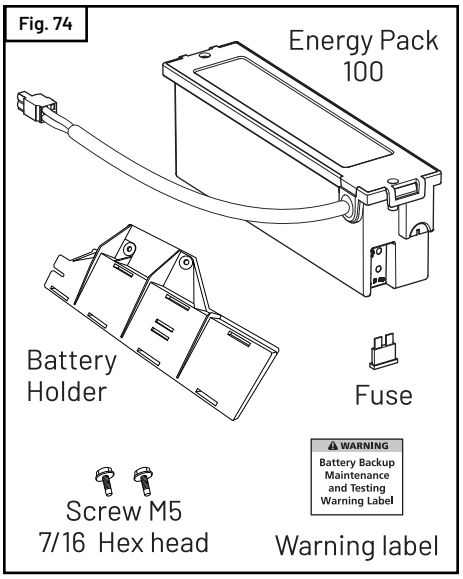

SYNERGY 200 SERIES ENERGY PACK INSTALLATION

- Disconnect power cord from operator (Fig. 75).
- Remove modular receiver (Fig. 75)
- Remove back cover (Fig. 75).
- Make opening in back plate for Battery Backup wire harness (Fig. 75).
- Locate battery holder and secure with two Screws M5 (Fig. 76).
- Insert energy pack 100 into battery holder (Fig. 76)
- Connect wire harness to connector XN70 (Fig. 76).
- Insert Battery Backup Fuse (Fig. 76).
- Locate Energy Pack 100 cord in back plate cutout and reinstall back cover (See Fig. 76A).
- Connect power cord to operator (Fig. 76).
- Apply Warning Label inside of garage.

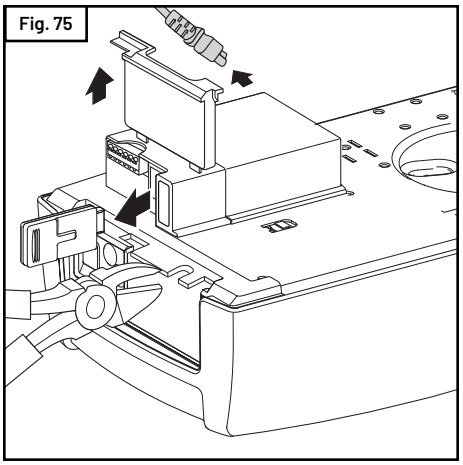

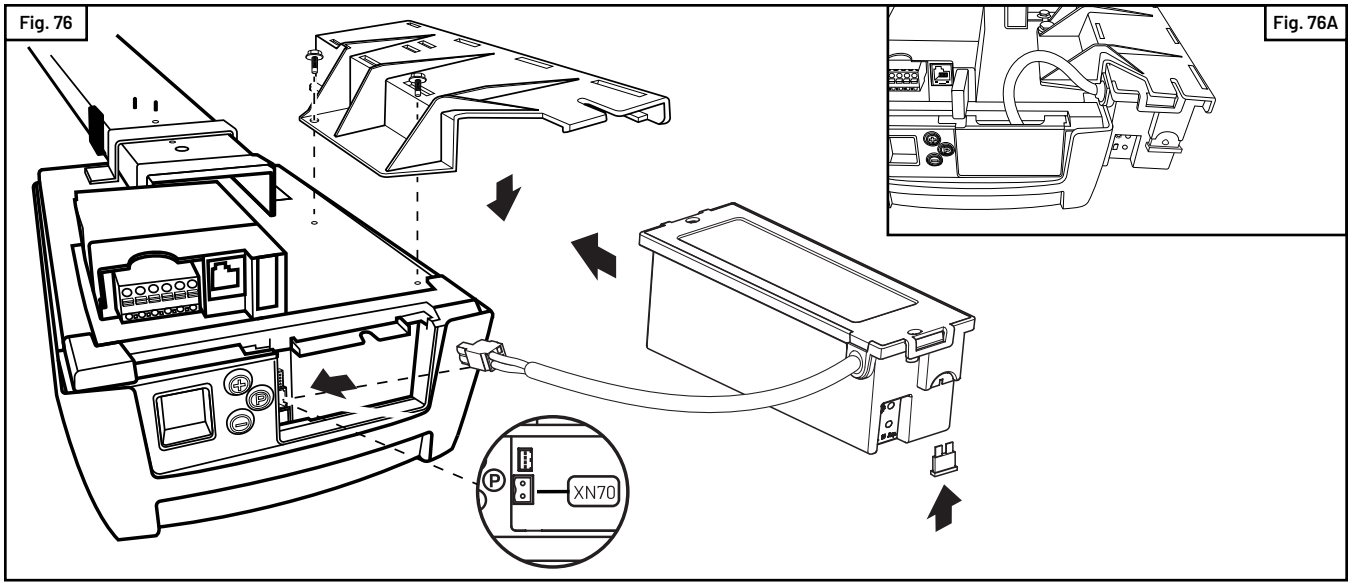

25-3. Energy pack 100 (Battery Backup)(cont'd)

SYNERGY 300 SERIES ENERGY PACK INSTALLATION:

- Disconnect power cord from operator (Fig. 78).
- Remove back cover (Fig. 78).
- Insert mounting plate (Fig. 79).
- Install energy pack and connect wire harness to connector XN70 (Fig. 80, 81).
- Insert fuse (Fig. 82).
- Insert light guide into back plate and snap plate back in place (Fig. 83).
- Connect power cord to operator (Fig. 84).

Fig. 77

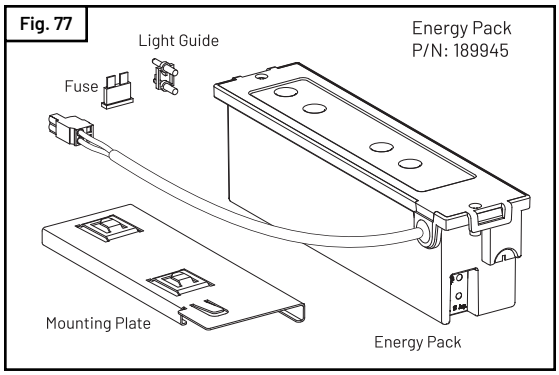

Fig. 78

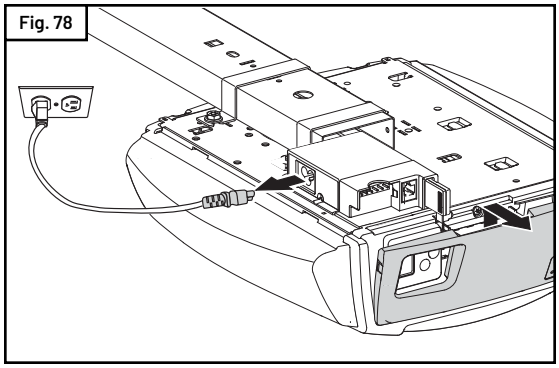

Fig. 79

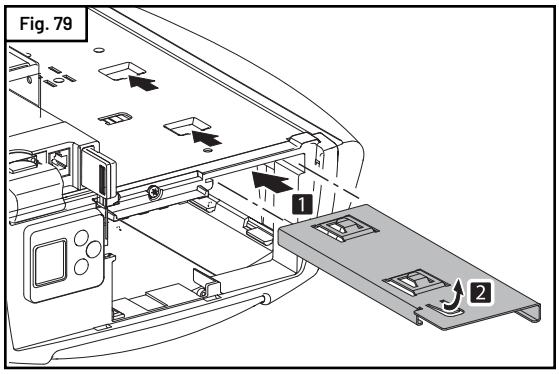

Fig. 80

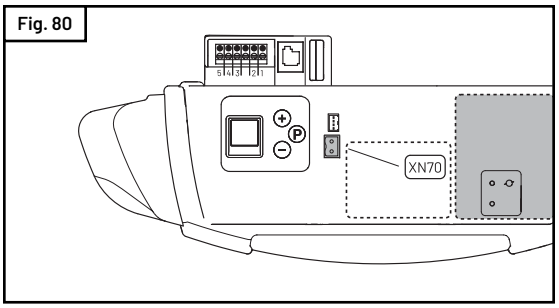

Fig. 81

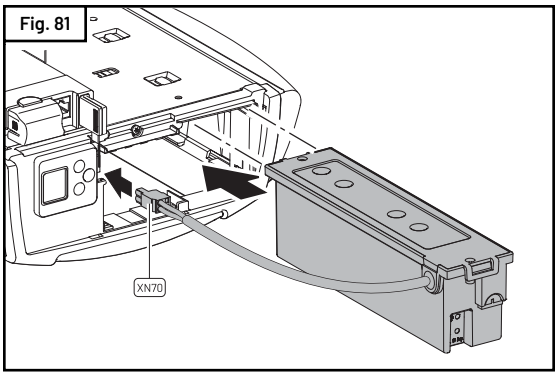

Fig. 82

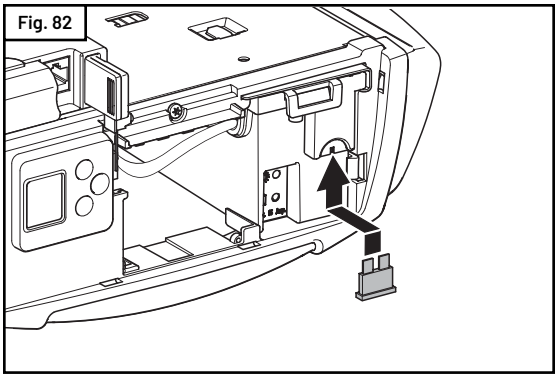

Fig. 83

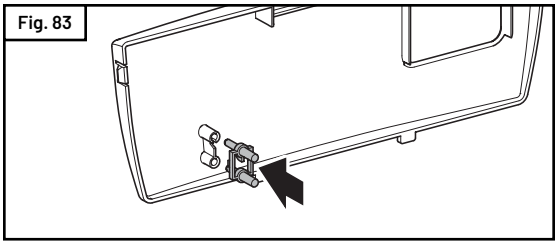

Fig. 84

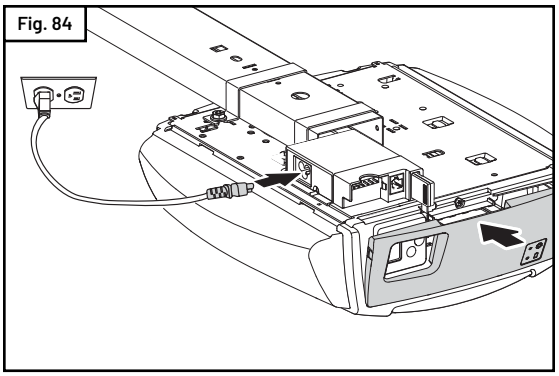

25-4. Energy pack 100 (Battery Backup) Activation

IMPORTANT

Battery Normal Charge Condition

Upon Connecting the new BBU Energy Pack 100 to the operator and connecting the operator to the main power source as shown in Fig. 84. After 20 seconds the system with automatically recognize the connection and display a screen shown in Fig. 85A.

IMPORTANT

Battery Low Charge Condition

In the event the operator does not recognize the connection, the steps in Fig. 85B must be performed to bring the BBU, Energy Pack 100, on-line with the operator.

Fig. 85

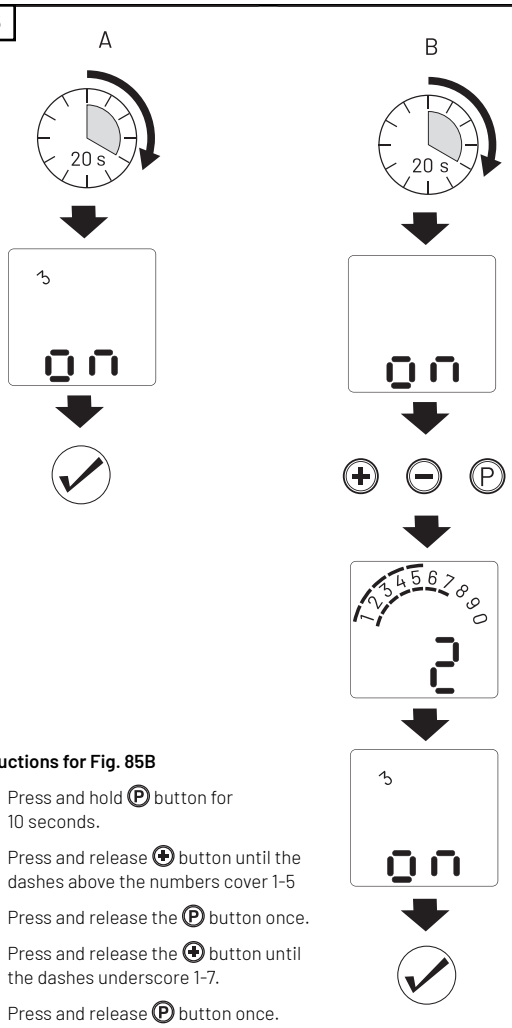

Instructions for Fig. 85B

1. Press and hold Ⓟ button for 10 seconds.
2. Press and release ⊕ button until the dashes above the numbers cover 1-5
3. Press and release the Ⓟ button once.
4. Press and release the ⊕ button until the dashes underscore 1-7.
5. Press and release Ⓟ button once.
6. Press and release ⊕ button — Number 2 is blinking
7. Press and release Ⓟ button once.
8. Press and hold button Ⓟ until the word "on" is being displayed — Number 3 on the screen indicates that the BBU has been activated.

Fig. 86

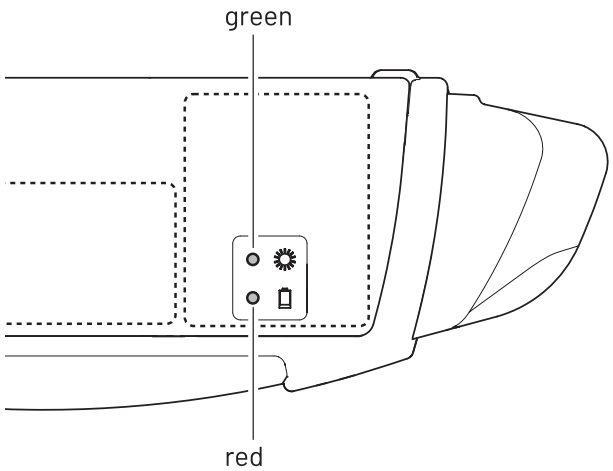

10.

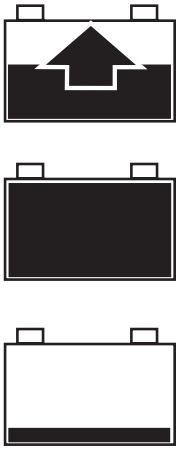

- Battery Charging green

  Note: New installation or after an electrical power outage requires 24 hours to fully charge

- All Systems are Normal Fully Charged green

- Battery is Low red
- Replace batteries if blinking red LED persists 24hrs after power is restored.

IMPORTANT

The battery charges when the garage door operator is plugged into a working electrical outlet (it has power). Required charging time for a new installation or after an electrical power outage is 24 hours.

- **To obtain maximum battery life and to prevent damage, disconnect the battery when the garage door operator is unplugged for an extended period of time.**
- **Energy Pack should be replaced every 1-2 years with normal use, under normal operating conditions.**
- **Replace fuse with Type Littlefuse Blade Fuse Series 257 rated 15 Amps, 32VDC ONLY (P/N 72280).**

25-5. Energy pack 100 (Battery Backup) Maintenance and Testing

WARNING

IMPORTANT MAINTENANCE AND TESTING INSTRUCTIONS TO PREVENT POSSIBLE SERIOUS INJURY OR DEATH:

GARAGE DOOR OPERATORS WITH A BATTERY BACKUP (BBU) SYSTEM ARE "NOT DESIGNED TO SERVE AS A LIFE SAFETY DEVICE"

All garage operators sold or replaced in the state of California effective July 1st, 2019 are required to be installed with a Battery Backup System (BBU). Violation of Bill SB 969 provisions are subject to a civil penalty of $1,000 per opener installed, manufactured, sold, or offered for sale which is not in compliance with Section 19890 of, and to added Section 19892 to, the Health and Safety Code relating to automatic garage door openers.

Battery Backup System (BBU) Maintenance and Testing

EVERY YEAR

Test periodically as outlined in testing guidelines below the battery backup system. Consider replacing the battery system to ensure the garage door operator will operate/function during an electrical power outage.

EVERY THREE (3) MONTHS

TESTING THE BATTERY BACKUP SYSTEM (BBU)

1. Unplug the garage door operator from AC power. The battery status GREEN LED will flash (operator is operating on battery power) or Status RED LED will flash (low battery power). Replace batteries if blinking RED LED persists 24 hours. after power is restored.
2. Open and close door using the remote control/transmitter or wall control console.
3. Plug the garage door opener back into AC Power. Verify the battery system status: LED is solid GREEN (Batteries are charging).

Note: New installation or after an electrical power outage, the system requires 24 hours for the batteries to fully charge.

FOR BATTERY BACKUP REPLACEMENT CONTACT MARANTEC AMERICA AT 1-888-622-2489.

Battery Backup replacement must be done ONLY with recommended by manufacturer part number 189945 (Battery Model WP1.2-12 Sealed Cell, Lead Acid with pressure release vents and Battery size 12V 1.2Ah).

25-6. Automatic-Timer-to-Close ATC 100 Kit (Optional Accessory)

WARNING

IMPORTANT INSTALLATION INSTRUCTIONS TO REDUCE THE RISK OF SEVERE INJURY OR DEATH:

7. **READ AND FOLLOW ALL WARNINGS AND INSTALLATION INSTRUCTIONS.**
8. **The Automatic-Timer-To-Close (ATC) feature is only available with models Synergy 360, 370, 380.**
9. **DO NOT** enable the Automatic-Timer-To-Close (ATC) functionality if operating either one-piece or swinging garage doors. **Enable ONLY when operating a sectional garage door.**
10. Do not connect the operator to source of power until this manual instructs you to do so.
11. Place the Operating Warning Label next to the wall control panel in a prominent location. Affix Safety Label on inside of garage door.
12. **SAVE THESE INSTRUCTIONS** for future safety, adjustment, and maintenance purposes.

FOR IMPORTANT SAFETY INSTRUCTIONS AND GARAGE DOOR OPERATOR INSTALLATION INSTRUCTIONS SEE PAGE 11 AND PAGE 44.

WARNING

IMPORTANT SAFETY INSTRUCTIONS TO REDUCE THE RISK OF SEVERE INJURY OR DEATH:

13. **READ AND FOLLOW ALL WARNINGS AND INSTALLATION INSTRUCTIONS.**
14. The Automatic-Timer-To-Close (ATC) feature is only available with models Synergy 360, 370, 380.
15. DO NOT enable the Automatic-Timer-To-Close (ATC) functionality if operating either one-piece or swinging garage doors. **Enable ONLY when operating a sectional garage door.**
16. Disconnect the electrical power to the garage door operator before making any repairs or removing the housing cover.
17. Never let children operate or play with door controls. Keep the remote control away from children.
18. Always keep the moving door in sight and away from people and objects until it is completely closed. **NO ONE SHOULD CROSS THE PATH OF THE MOVING DOOR.**
19. **NEVER GO UNDER A STOPPED, PARTIALLY OPEN DOOR.**
20. **KEEP GARAGE DOORS PROPERLY BALANCED.** See Garage Door Owner's Manual. An improperly balanced door could cause severe injury or death. Have a qualified service person make repairs to cables, spring assemblies, and other hardware.
21. **SAVE THESE INSTRUCTIONS** for future safety, adjustment, and maintenance purposes.

FOR IMPORTANT SAFETY INSTRUCTIONS AND GARAGE DOOR OPERATOR INSTALLATION INSTRUCTIONS SEE PAGE 11 AND PAGE 44.

25-6. Automatic-Timer-to-Close ATC 100 Kit (cont'd)

AUTOMATIC-TIMER-TO-CLOSE (ATC) INSTALLATION INSTRUCTIONS

Available ONLY with models Synergy 360, 370, 380.

- Disconnect power cord from operator.
- Remove back cover.
- Connect cable to power board.
- Slide board into housing.
- Slide module into GDO expansion module slot.
- Plug connector into operator's connector XW81.
- Replace back cover.
- Connect power cord to operator.
- Place ATC 100 operating Warning Label next to operator's Warning Label.

WARNING

To reduce the risk of FIRE or INJURY:

- **Disconnect ALL electric and battery power BEFORE performing ANY service or maintenance.**
- **ATC is to be used ONLY with sectional garage doors.**
- **DO NOT enable the Automatic-Timer-To-Close (ATC) functionality if operating either one-piece or swinging garage doors.**
- **DO NOT enable ATC if operating a one-piece garage door.**
- **ALWAYS wear protective eye protection.**

Fig. 87 ATC 100 Kit P/N: 105708

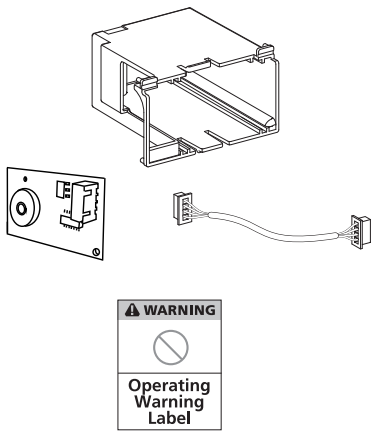

Fig. 88

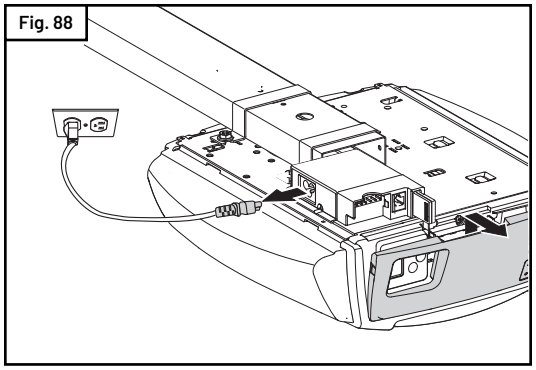

Fig. 89

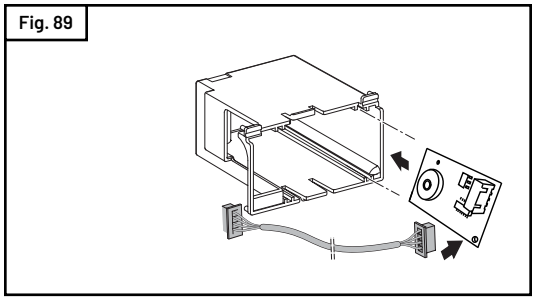

Fig. 90

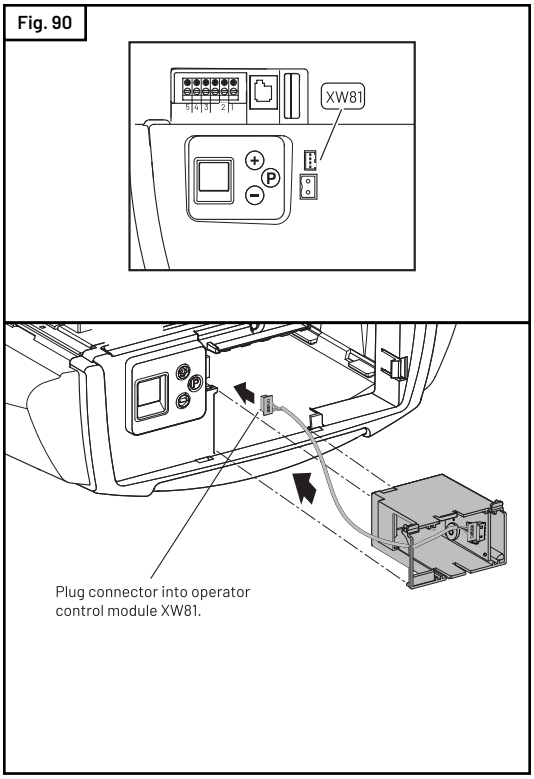

Fig. 91

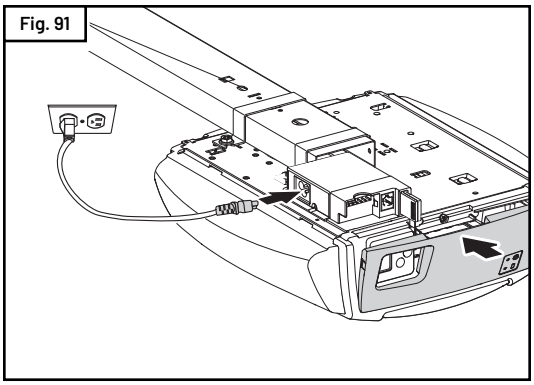

25-6. Automatic-Timer-to-Close ATC 100 Kit (cont'd)

IMPORTANT

If the door encounters an obstruction while closing, the garage door operator will make a second attempt to close the door. If the obstruction has not been cleared after the second attempt, the garage door operator will reverse open, stop and WILL NOT close until the obstruction has been cleared. ATC will not work when the photo eye sensors are misaligned. This feature is NOT intended to be the primary method of closing the door.

AUTOMATIC-TIMER-TO-CLOSE (ATC) SET-UP INSTRUCTIONS

The ATC will set automatically to close your garage door from the fully open position after 4 minutes. The garage operator will **BEEP** and the lights will **FLASH** for approximately 10 seconds before closing the door. To customize the door open time and warning phase from default settings above, follow the steps below:

Door Open Time

1. Press and hold Ⓟ button for 10 seconds.
2. Press and release ⊕ button until the dashes above the numbers cover 1-3.
3. Press and release the Ⓟ button once.
4. Press and release the ⊕ button until the dashes underscore 1-3.
5. Press and release the Ⓟ button once.
6. Press and release the ⊕ button to scroll and select the door open time available from table below:

Door Open Times

Displayed Times on Operator	Time
10-50 Increments of 5 seconds	10-50 seconds
1.2	80 seconds
1.4	100 seconds
2.0	120 seconds
2.3	150 seconds
3.0	180 seconds
4.1*	250 seconds
9	9 minutes
1hr	1 hour

Open Timer Screen Display

* example

7. Once the open time is selected press and release Ⓟ button once.

WARNING PHASE TIME

1. Press and release the Ⓟ button once.
2. Press and release the ⊕ button until the dashes underscore 1-4.
3. Press and release the Ⓟ button once.
4. Press and release the ⊕ button to select the warning time available from the table below:

Warning Phase Times

Displayed Times on Operator	Time
5,10*-55 Increments of 5 seconds	5-55 seconds
1	60 seconds
1.1	65 seconds
1.2	70 seconds
1.3	80 seconds

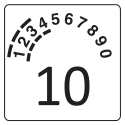

Open Timer Screen Display

* example

5. Once warning time is selected press and release the Ⓟ button once.
6. Press and hold Ⓟ button until the word "**On**" is being displayed.

SCREEN DISPLAYED WHEN ATC IS ACTIVE AND DOOR REACHES FULLY OPEN POSITION.

Open Timer Screen Display

* example

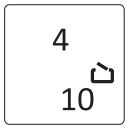

Open Timer Screen Display

* example

25-7. Emergency Vault Release Adapter Kit

WARNING

Read and follow all warnings and installation instructions carefully as outlined in the operator manual. Failure to follow these warnings and instructions may result in severe injury or death.

WARNING

To prevent possible serious injury or death from a falling door, make sure "ONLY" disengage the garage door from trolley when garage door is in the "CLOSE" position.

EMERGENCY RELEASE CABLE INSTALLATION

1. Disengage trolley by pulling emergency release cord red handle (Fig. 93).
2. Remove red cover from trolley slider (Fig. 94).
3. Fit steel cable from door arm side under trolley bridge (Fig. 495.
4. Insert the sphere shaped cable end into trolley red slider (Fig. 95).
5. Pull the cable to secure the sphere-shaped end inside the slider. You will hear a "click" when the sphere reaches the designated area.
6. Insert the cable sleeve metal cap into the trolley recess and secure it with the cable bracket (Fig. 96).
7. Attach vault lock (not provided) to the loop end of vault lock adapter cable (Fig. 97). If vault lock termination point is a cable, clamp down to secure. If vault lock termination point is a rope, knot to secure.
8. Replace red cover.
9. Re-engage trolley by pulling green bell handle (Fig. 93)

Note: Make sure trolley is engaged with belt connector.

Fig. 92

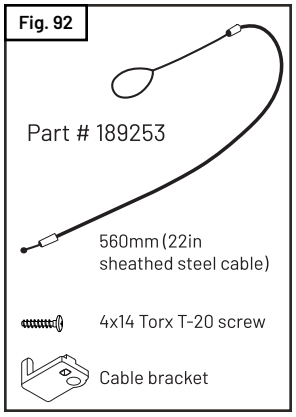

Fig. 93

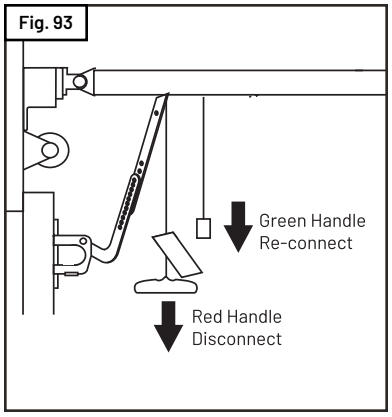

Fig. 94

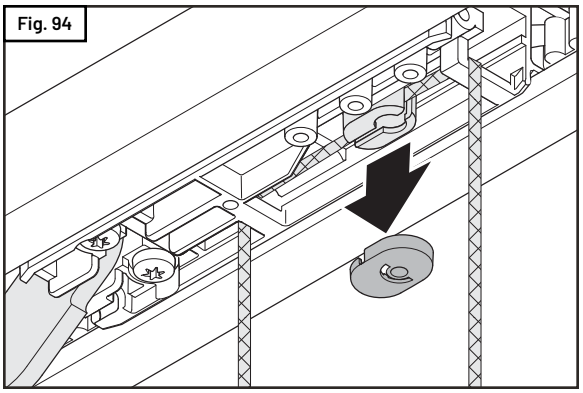

Fig. 95

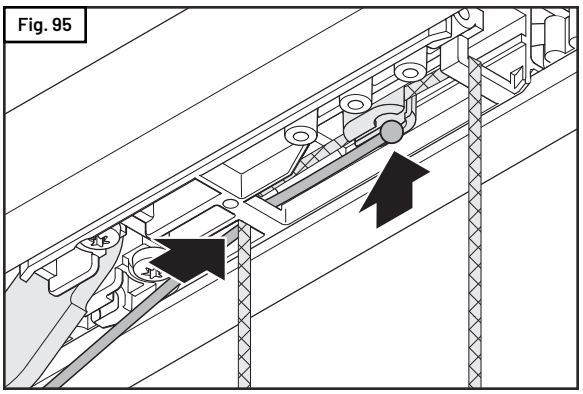

Fig. 96

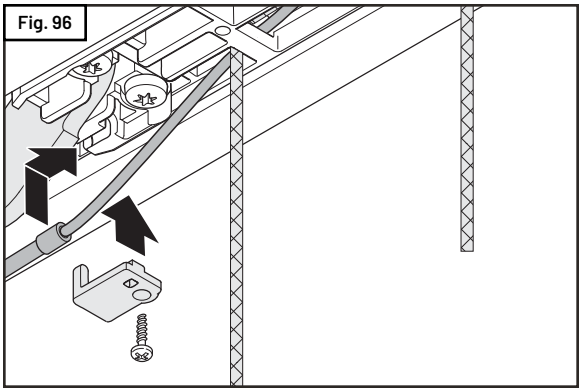

Fig. 97

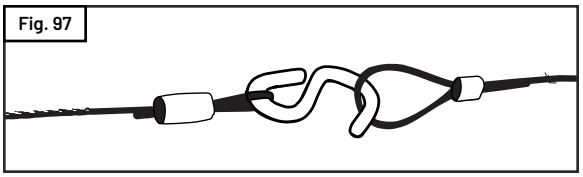

26. Troubleshooting

The operator displays the system fault(s) automatically one at a time as follows:

Fault Display	(Example - Error Code 7)	
7	7	Note: The last system fault code can be viewed by pressing the "P" button once. To return to operation mode press "-" or "+" button.

Fault Display	Code	Problem	Solution
7	7	Note: If no buttons are pressed within 120 seconds, the programming mode terminates automatically.	
8	8	• Adjustments setting interrupted before completion.	• Door can be operated normally. Recheck adjustments if adjustment settings were not completed. Refer to section **11. System Set Up (page 24)**. • Contact Marantec technical support.
9	9	• Rational speed (RPM) sensor impulse not present, operator system is obstructed.	• Contact Marantec technical support.
10	10	• The door does not move easily or is obstructed.	• The maximum driving power has been set too low. Adjust open and closing forces. Reference Level 2 Menu's 1 and 2. If problem persists contact Marantec technical support.
11	11	• Excess travel stop.	• Reset door travel. Reference section **11. System Set Up (page 24)**. • If problem persist, contact Marantec technical support.
15	15	• Photo eye sensors not connected properly. • Photo eye sensors not aligned. • Obstruction in the door path (photo eye beam broken)	• Check photo eye sensors wiring and connections. • Realign photo eye sensors. • Remove obstruction from door path.
16	16	• The current sensor for the monitoring motor overload is defective.	• Contact Marantec technical support.
26	26	• Power overload condition.	• Have the outlet assigned for the operator and/or supplied power checked.
28	28	• Door movement too stiff or irregular. • Door blocked. • Operator operating sensitivity set too sensitive (low).	• Check door for obstructions, proper manual operation, proper balance, or broken springs. Clear obstructions or have door serviced, If needed. • Make adjustment to operator sensitivity. Reference Level 2 Menu's 3 and 4. If issue persists, contact Marantec technical support.
30	30	• MS bus fault.	• Reset the bus modules. • Have the connected bus modules checked.
35	35	• Electronic defect.	• Contact Marantec technical support services.
36	36	• Wall control connected incorrectly.	• Check wall control terminals connection. • Reset operator.

Caution

33

Short and rapid cycles are conducted with the operator (motor). This condition could result in overheating of motor / transformer.

* Contact Marantec Customer Service at our toll free number 1-888-622-2489 to find nearest authorized service center.

27. Maintenance Adjustments

To ensure continued safe operation and extended life of your operator system, periodic checking for proper operation is necessary. Occasional maintenance and readjustment of your system may also be needed.

Monthly

Check reversal system by performing "safety reversal test" described in this manual.

Check proper operation of door by manually moving door open and closed. If door binds or sticks, or is out of balance call for garage door service.

Check and test photo eye safety system as described in this manual.

Once Every Year

- Keep door rollers, hinges, and bearings properly lubricated by following recommended door instructions or contacting a door service company in your area.

As Needed

- Readjust operator travel limits and force settings as necessary — due to cold weather, normal wear of door, etc. For any periodic adjustments needed refer to this manual.
- Check and readjust belt tension, if necessary, in the unlikely event that it loses its proper tension during the life of the operator. Always check the reversal system after any adjustment of travel limits or forces. A door operator that is not checked could possibly be out of adjustment and be dangerous.

28. Maintenance Record

Good maintenance of your garage door is an imperative requirement. Not only will it prolong the life of the door and the opener, but more importantly, it assures your safety and that of others. Use the form below to record the monthly, yearly, and "as needed" maintenance.

Maintenance Steps	Date	Performed by	Comments

29. Limited Parts Warranty

MARANTEC AMERICA CORPORATION
Synergy Professional Series Residential Garage Door Opener System
Limited Parts Warranty
Synergy 260, 270, 280, 360, 370, and 380 Models

MARANTEC AMERICA CORPORATION WARRANTS:

The Synergy 260 System Limited Warranty is 2 years for parts and a Limited Lifetime* Warranty for the motor and rail system.

The Synergy 270 & 280 Systems Limited Warranty is 4 years for parts and a Limited Lifetime* Warranty for the motor and rail system.

The Synergy 360, 370 & 380 Systems Limited Warranty is 8 years for parts and a Limited Lifetime* Warranty for the motor and rail system.

LED Lighting System for 5 years.

Battery Backup System (where applicable) and Accessories for 1 year.

THE LIMITED LIFETIME* PORTION OF THE WARRANTY IS FOR AS LONG AS THE ORIGINAL PURCHASER OF THE MARANTEC SYSTEM OWNS HIS OR HER HOME OR 20,000 SYSTEM OPEN & CLOSE CYCLES, WHICHEVER COMES FIRST.

LIMITED WARRANTY COVERAGE: THE LIMITED LIFETIME* WARRANTY IS FOR AS LONG AS THE ORIGINAL PURCHASER OF THE MARANTEC SYSTEM OWNS HIS OR HER HOME, OR 20,000 SYSTEM OPEN & CLOSE CYCLES, WHICHEVER COMES FIRST. This Warranty applies, upon purchase from a Marantec reseller and installation and registration of the product within 14 days of the date of installation of the product, (or within 30 days of closing on a new home from a developer) to any defect in materials or workmanship in the Marantec product parts or components from personal, normal, household use in compliance with the Owner's Manual for a period of 2 years for the Synergy 260, a period of 4 years for the 270 & 280 Systems, and a period of 8 years for the 360, 370 & 380 Systems from the date of installation (or closing date if a new home purchased from a developer) on its parts and, for the Limited Lifetime* portion of this Warranty on the motor and rail system and belt, for as long as the original retail purchaser owns his or her home or 20,000 system open & close cycles, whichever comes first. Marantec warrants this Garage Door Opener system to its first retail, consumer purchaser only. This is not a commercial product. Marantec disclaims any and all warranties in the event that the product is obtained from a source which is not a Marantec authorized reseller. "Grey market" purchases are not warranted or recognized in any manner whatsoever. No "aftermarket" installation, alteration, opening of the housing or cases, modification or repairs are recognized or warranted. Any of the foregoing conduct voids all warranty provisions. This warranty is for parts only and is not for any service call(s) or labor in connection with the repair or replacement of the unit or its parts. Parts will only be shipped to a Marantec authorized reseller.

In our fast moving, internet and cell phone world, various manufacturers are creating door opener accessories, for example, internet operational products or cell phone operational products. These manufacturers claim that their products have been tested and are compatible with Marantec products. With respect to all such accessories which are not Marantec labeled: Marantec disclaims all responsibility for compatibility with Marantec labeled products, as well as the operation of such non-Marantec accessories or warranty claims and all other claims, whether actual or implied by law, for such non-Marantec labeled product. All aftermarket accessories, parts or components, sometimes installed by authorized Marantec dealers, are not covered by the Marantec Limited Warranty. Any and all damage caused to you or to Marantec labeled components due to the failure of aftermarket accessories or parts is not covered. You must make all claims with the manufacturer of any accessory which is not Marantec labeled.

29. Limited Parts Warranty (cont'd)

Marantec Accessories: Marantec accessories include such items as transmitters, wall controls, photo eye systems, and wireless/keyless entry systems. These are warranted to be free from defects in materials or workman ship for 1 year from the date of installation (or closing date if a new home purchased from a developer). At Marantec's sole option, Marantec may elect to replace the accessory with new or reconditioned parts, components or units utilizing product of the same or similar design available at that given time. **WITH RESPECT TO ACCESSORIES, ALL OTHER WARRANTIES, INCLUDING FITNESS FOR PARTICULAR PURPOSE AND MERCHANTABILITY ARE SPECIFICALLY DISCLAIMED AND THE LIMITED WARRANTY SET FORT BELOW IN BOLD TYPE IS HEREIN INCORPORATED BY REFERENCE.**

LED Lighting System and Battery Backup System: Marantec warrants the parts of the LED Lighting System, including its lighting bar, LEDs, and lens covers for 5 years and Battery Backup system (where applicable, including it's charging system and battery) for 1 year from the date of installation (or closing date if a new home purchased from a developer). These are warranted to be free from defects in materials or workmanship for 1 year from the date of installation (or closing date if a new home purchased from a developer). At Marantec's sole option, Marantec may elect to replace the System with new or reconditioned parts, components or units utilizing product of the same or similar design available at that given time. **WITH RESPECT TO THE LED LIGHTING SYSTEM AND BATTERY BACKUP SYSTEM, ALL OTHER WARRANTIES, INCLUDING FITNESS FOR PARTICULAR PURPOSE AND MERCHANTABILITY ARE SPECIFICALLY DISCLAIMED AND THE LIMITED WARRANTY SET FORTH BELOW IN BOLD TYPE IS HEREIN INCORPORATED BY REFERENCE.**

Marantec does **not** warrant batteries (except the Battery Backup System above), sensors or LED bulbs (except the LED Lighting System LEDs above). Unauthorized repairs or repair parts, installations, commercial use, damage while in transit, defects or damage resulting from power washing, water or moisture exposure, or accidents, power failure and surges, resulting from alterations, lack of proper maintenance, unauthorized repair or modification of the product, opening of housing or case, misuse or abuse of the product, fire, flood, acts of God, damage to doors, tracks, springs, hardware or the residence, its contents and vehicles, other property or persons or other failures due to failure to follow the recommendations of the Owner's Manual are not warranted. This warranty applies only to Marantec systems purchased from authorized Marantec retail sellers and used in the United States, its Territories or Canada. Marantec make no warranties outside the United States, its Territories or Canada.

Marantec Commitment: If Marantec determines the product parts to be defective in materials or workmanship, then Marantec will supply parts for the repair or replacement of the defect to the Marantec authorized professional installer at no cost to you. You must pay for the service call and labor for installation of the part(s) determined to be defective by Marantec. At Marantec's sole option, Marantec may elect to replace the part(s) with new or reconditioned parts, components or units utilizing product of the same or similar design available at that given time.

THIS LIMITED WARRANTY IS IN LIEU OF ANY OTHER WARRANTIES, EXPRESS OR IMPLIED, INCLUDING ANY IMPLIED WARRANTIES OF MERCHANTABILITY OR FITNESS FOR A PARTICULAR PURPOSE, OR OTHER WARRANTIES IMPLIED BY STATUTE, AND OF ANY OTHER OBLIGATIONS OR LIABILITY ON THE PART OF MARANTEC AMERICA CORPORATION. THIS LIMITED WARRANTY DOES NOT COVER NON-DEFECT DAMAGE CAUSED BY IMPROPER INSTALLATION, OPERATION OR CARE AND MAINTENANCE, INCLUDING BUT NOT LIMITED TO ABUSE, MISUSE, POWER SURGE, FAILURE TO PROVIDE REASONABLE AND NECESSARY MAINTENANCE OR ANY ALTERATIONS TO THIS PRODUCT. LABOR CHARGES FOR DISMANTLING OR REINSTALLING A REPAIRED OR REPLACED UNIT ARE EXCLUDED.

UNDER NO CIRCUMSTANCES SHALL MARANTEC AMERICA CORPORATION BE LIABLE FOR CONSEQUENTIAL, INCIDENTAL OR SPECIAL DAMAGES ARISING IN CONNECTION WITH THE USE OR INABILITY TO USE THIS PRODUCT OR THE PREMISES IN WHICH IT IS UTILIZED. IN NO EVENT SHALL MARANTEC AMERICA CORPORATION INCUR LIABILITY FOR BREACH OF WARRANTY, BREACH OF CONTRACT, NEGLIGENCE OR STRICT LIABILITY IN EXCESS OF THE COST OF THE PRODUCT COVERED HEREBY. NO PERSON IS AUTHORIZED TO ASSUME, FOR MARANTEC AMERICA CORPORATION, ANY OTHER LIABILITY OR MAKE ANY MODIFICATIONS OR EXTENSIONS TO THE WARRANTY OF THIS PRODUCT. THIS LIMITED WARRANTY MAY NOT BE TRANSFERRED OR ASSIGNED.

30. Warranty Limitations, Claims and Service

This Limited Warranty is the one which Marantec gives on this product and sets forth all of its responsibilities regarding the Marantec product. There are no other express or implied warranties. Installation by unauthorized personnel or use of unauthorized parts or accessories could cause improper operation and even create dangerous conditions and voids all warranties. This could void the UL Safety Approval of the product and constitute a safety hazard.

This Limited Warranty contains the entire warranty on the product. All discussions, representations or negotiations between the consumer and the retail seller are merged into this Limited Warranty, and there are no understandings or warranties other than those herein. None of the terms of the Limited Warranty shall be waived or modified to any extent, except by a written instrument signed and delivered by Marantec's Corporate Officer. This Limited Warranty is being delivered in Gurnee, Illinois, USA and is intended to be performed in the State of Illinois and shall be construed and enforced in accord with the laws and statutes of the State of Illinois without regard to or application of its rules on the conflict of laws, with the proper venue for any disputes being that of Marantec's registered office in Illinois or its corporate offices in Gurnee, Illinois, whichever Marantec elects. Marantec expressly disclaims the application to this Limited Warranty of the 1980 United Nations Convention on the International Sale of Goods. Any interpretation of this Limited Warranty shall be conducted in English and no other language. **ALL CLAIMS AND CAUSES OF ACTION OF ANY NATURE AGAINST MARANTEC AMERICA CORPORATION SHALL BE BROUGHT WITHIN 1 YEAR OF THE DATE OF DISCOVERY OF THE CLAIM.** In the event any action or proceeding or claim is asserted or brought against Marantec, if Marantec prevails, then Marantec shall be entitled to recover all costs and expenses, including the actual fees of its attorneys and expert or professional witnesses incurred in connection with such action or proceeding or claim.

This Limited Warranty becomes valid only upon the receipt of "Payment in Full" by Marantec from the Marantec reseller and upon receipt of "Payment in Full" by the Marantec reseller from the end user. This Limited Warranty is null and void if the System is not installed within 24 months of the date of manufacture as marked on the product housing. This Limited Warranty is void outside the United States, its Territories and Canada.

Whenever possible, each provision of this Limited Warranty shall be interpreted in such a manner as to be effective and valid under applicable Illinois law. If any provisions of this Limited Warranty are prohibited or invalidated under applicable law, then such provisions shall only be ineffective to the extent of such prohibition or invalidity, without invalidating the remaining provisions of this Limited Warranty.

Some jurisdictions do not allow the exclusion or limitation of consequential, incidental or special damages, so the above limitations or exclusions may not apply to you. This Limited Warranty gives you specific legal rights and you may also have other rights which vary from state to state.

31. Registration

This Warranty becomes effective upon registration at the Marantec web site: www.marantecamerica.com. If you do not have access to the internet, please call 1-888-622-2489 to complete a warranty form with one of our customer service representatives.

32. For Warranty Service

Please contact Marantec Customer Service at 1-888-622-2489 for all questions related to service.

Copyright 2026. All rights reserved.
No part of this manual may be reproduced without our prior written approval.
Marantec reserves the right to change design and technical specification subject without notice.

Notes

Notes

MARANTEC AMERICA CORPORATION
5705 CENTERPOINT COURT
GURNEE, IL 60031
TEL: 1-847-478-1500
WWW.MARANTECAMERICA.COM

marantec
engineered for you